Ultrasound Controller

Manual

AQ M-Tech AB

Ultrasound Controller

D72, DP72, D128, G72, GP72, G128

AQ M-Tech AB

- **Manual version** **5.51**
- **Software version** **5.5x**
- **D72 hardware version** **RevE**
- **DP72 hardware version** **RevE**
- **D128 hardware version** **RevA**
- **G72 hardware version** **RevA**
- **GP72 hardware version** **RevA**
- **GSD file version** **5.0**

The manual version should conform to the software and hardware version of the Ultrasound Controller.

The software version of the Ultrasound Controller is shown briefly on the display when power is switched on. It can also be found in the HELP-menu. This manual is available at www.aqmtech.com

January 2019

Table of contents

1. Manufacturer information 6
Manufacturer Declaration of Conformity 6
Limited Warranty 6
Warning 6
Certificate of Quality and Function 6
Manufacturer: 6

2. Introduction 7
Ultrasound Controller 7
Installing Ultrasound Controller D72, G72 7
Installing Ultrasound Controller DP72, GP72 9
Installing Ultrasound Controller D128, G128 9

3. Navigating the menu system 10
Sensor MODE and the start-screen 10

4. Electric Noise 11
Ground Connection and Sensor Cable 11
Noise from Variable Frequency Drives 11

5. Ex-installation with ex-barriers 11

6. Air Sensor Mode 12
Quick start guide 12
Functional Description 12
Orientation of the Air Sensor 12
Connecting the Air Sensor 13
Connecting the Air Sensor Ex via Ex-barrier 13
Setting lowest possible sensitivity for bubbles 14
SETTINGS 15
Air Sensor start-screen 16
ADVANCED SETTINGS 16
CALIBRATION 16
SHOW DATA 17
Calibration Data 17
Normal Measurement Data 17
Very Low Sensitivity Data 17
AUXILIARY DATA 18
HELP 18
Sound velocity in the Air Sensor 18
Air Sensor TROUBLESHOOTING 18

7. Level Switch Mode 19
Quick start guide 19
Connecting the Level Switch 19
Level Switch Type and Technique 19
Echo Technique 20
WR Technique 20
Mounting the Level Switch 21
Mounting Level Switch MK 21
Mounting Level Switch KS / KSF / RS / RSF / CF / LS / LSF 21
Stainless Steel and Glass Containers 21
Level Switch start-screen 22
SETTINGS 22
Container with jacket 23
CALIBRATION 23
SHOW DATA 23
ADVANCED SETTINGS 24
HELP 24
Sound velocity and the Level Switch 24
Measurement Reliability 24
Level Switch TROUBLESHOOTING 24
Requesting support from AQ M-Tech AB 25

8. Level Sensor Mode 26
Quick start guide 26

Functional Description 26
Connecting the level sensor 27
Mounting the Sensor for level and velocity 27
Mounting the sensor for velocity 27
Installing the sensor on a non-horizontal bottom 28
Container top 28
Level Sensor start-screen 28
SETTINGS 28
CALIBRATION 29
SHOW DATA 29
ADVANCED SETTINGS 30
HELP 30
Level Sensor TROUBLESHOOTING 30

9. Gel Distance Mode 32
Quick start guide 32
Functional Description 32
Connecting the gel distance sensor 33
Gel Distance start-screen 33
SETTINGS 33
CALIBRATION 34
SHOW DATA 34
ADVANCED SETTINGS 34
HELP 34
Gel Distance TROUBLESHOOTING 34

10. Gel Sensor Mode 35
Quick start guide 35
Connecting the Gel Sensor 35
Measuring Gel 36
Measurement technique 36
Mounting the Level Switch 37
Gel Sensor start-screen 37
SETTINGS 38
CALIBRATION 38
SHOW DATA 39
ADVANCED SETTINGS 39
HELP 39
Measurement Reliability 39
Gel Sensor TROUBLESHOOTING 40

11. Profibus DP 41
Connecting Profibus 41
PROFIBUS Parameters 41
Profibus Status-symbol 41
Request Data 41
Response Data 42
Request Data table 42
TROUBLESHOOTING 42

12. Technical specifications Ultrasound Controller 44

13. Parameter settings 45
Level Sensor mode 46
Gel Distance Sensor mode 46
Gel Sensor mode 47
PROFIBUS 47

14. Software Version History 48
D72RevE and DP72RevE and D128RevA and G72RevA 48
D72RevD and DP72RevD 49

1. Manufacturer information

AQ M-Tech AB, (previously AQ Elteknik AB) operates a policy of on-going development and reserves the right to make changes and improvements to any of the products described in this manual without prior notice. Under no circumstances shall AQ M-Tech be held responsible for any loss or indirect damage howsoever caused. The content of this document is provided as it is. AQ M-Tech AB reserves the right to revise this document or withdraw it at any time without prior notice.

Manufacturer Declaration of Conformity

Manufacturer AQ M-Tech AB, Sweden declares, that the product: Ultrasound Controller marked with CE-label conforms with the following standards: EN 61000-6-2, EN 61000-6-4, EN55011 (Group 1, Class B).

Ultrasound Controller marked with conforms to WEEE directive 2012/19/EU. The Ultrasound Controller also conforms to RoHS directive 2011/65/EU. When the Ultrasound Controller is to be discarded, send it back to AQ M-Tech AB for safe disposal.

Limited Warranty

AQ M-Tech AB warrants to the original end user that the Ultrasound Controller is free from any defects in materials or workmanship for a period of one year from the date of purchase. During the warranty period, should the Ultrasound Controller have indications of failure due to faulty workmanship or materials, AQ M-Tech AB will replace it with no charge. This warranty shall not apply if the Ultrasound Controller is modified, misused or subjected to abnormal working conditions. Replacement as provided under this warranty is the only remedy of the purchaser. The purchaser pays freight to AQ M-Tech AB. AQ M-Tech AB shall in no event be held liable for indirect or consequential damages of any kind or character to the purchaser.

Warning

The Ultrasound Controller is intended to be used with the Air Sensor or the Level Switch, all of them manufactured by AQ M-Tech AB. AQ M-Tech AB takes no responsibility for any possible damage that could happen if any other sensor not manufactured by AQ M-Tech AB is connected to the Ultrasound Controller.

It is not allowed to repair or modify sensors or Ultrasound Controller.

Certificate of Quality and Function

AQ M-Tech AB guaranties that the Ultrasound Controller has passed function and quality tests.

Manufacturer:

AQ M-Tech AB
Bolandsgatan 10
SE-753 23 Uppsala
Sweden
www.aqmtech.se

Phone: +46 184702900

info.aqmtech@agg.se

2. Introduction

Ultrasound Controller

Ultrasound Controller uses ultrasound to make measurements. It can detect bubbles in flowing liquid or it can detect presence of liquid behind a container wall or it can measure continuous liquid level. The Ultrasound Controller has four different modes of operation:

Air Sensor mode: The Air Sensor monitors the presence of gas or particles in flowing liquid. The Air Sensor is very reliable and easy to use. Two Air Sensors can be connected to one Ultrasound Controller.

Level Switch mode: The Level Switch is a small sensor which attached to the outside of the container can sense the presence of liquid inside the container without making hole in the container. Four Level Switches can be connected to one Ultrasound Controller.

Level Sensor mode: Continuous liquid level is measured with a Level Switch attached under the container bottom (no hole in the container). High accuracy is achieved with a second Level Switch measuring liquid sound velocity. Two levels can be measured with one Ultrasound Controller.

Gel Distance Sensor mode: Continuous gel distance is measured with a Gel Distance Sensor. This mode is only available in G72.

Gel Sensor mode: The Level Switch attached to the outside of the container can sense the presence of gel inside the container without making hole in the container. Four single gel-levels can be measured with one Ultrasound Controller.

The **software version** of the Ultrasound Controller is shown briefly on the display when power is switched on. The software version can also be found in the HELP-menu. Software versions may differ slightly and therefore it is usually better to use a manual version corresponding to the software version, even though a later manual version can have less errors.

Installing Ultrasound Controller D72, G72

The Ultrasound Controller should be protected from dust and water. It is made to be attached to a DIN-rail, to which it snaps easily and can be removed by pushing up and bending the top out. Usually it is installed in a cabinet. The connector terminals can be removed by pulling the connector out. Connections for terminal 1-7 and D-sub, see table. Connections for terminal 8-17 depend on the selected mode, see table in the corresponding chapter.

The Ultrasound Controller should be installed in accordance with national regulations. A person with the required knowledge should perform the installation.

D72 G72 terminal	Description
1	+ supply PLUS 24V
2	– supply MINUS
3	Relay common
4	Relay 1
5	Relay 2
6	Relay 3
7	Relay 4
D-sub 1	Cable screen
D-sub 2	
D-sub 3	Reserved
D-sub 4	+ 4-20mA output B
D-sub 5	mA output MINUS
D-sub 6	
D-sub 7	
D-sub 8	Reserved
D-sub 9	+ 4-20mA output A

1 Terminal

2 Terminal for sensors

3 D-sub

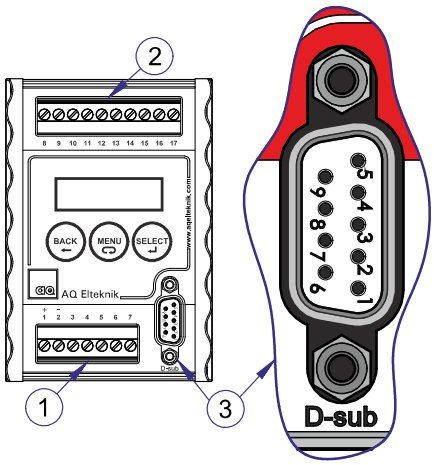

Installing Ultrasound Controller DP72, GP72

The Ultrasound Controller DP72 and GP72 should be protected from dust and water. It is made to be attached to a DIN-rail, to which it snaps easily and can be removed by pushing up and bending the top out. Usually it is installed in a cabinet. The green connector terminals can be removed by pulling the connector out. Connections for terminal 1-7 and D-sub, see table. Connections for terminal 8-17 depend on the selected mode, see table in the corresponding chapter.

The Ultrasound Controller should be installed in accordance with national regulations. A person with the required knowledge should perform the installation.

1 Terminal

2 Terminal (for Sensors)

3 D-sub

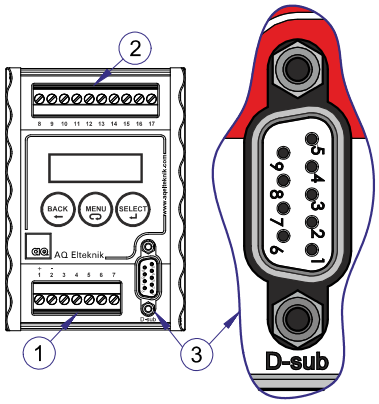

DP72 GP72 terminal	Description
1	+ supply PLUS
2	– supply MINUS
3	Relay common
4	Relay 1
5	Relay 2
6	Relay 3
7	Relay 4
D-sub 1	Cable screen
D-sub 2	
D-sub 3	Profibus B+
D-sub 4	+ 4-20mA output B
D-sub 5	mA output MINUS
D-sub 6	+5V output
D-sub 7	
D-sub 8	Profibus A-
D-sub 9	+ 4-20mA output A

Installing Ultrasound Controller D128, G128

The Ultrasound Controller D128 and G128 is protected according to IP65 and can be installed outside a protecting cabinet. The bottom plate must be removed in order to access the terminals. Remove dummy covering and insert cable glands as needed. There are 3 small and 4 big cable glands. There should be only one cable in each cable gland to achieve full IP65 protection. The pressure compensation element can be moved to different place but must not be removed completely. Make sure the gasket is in place when screwing the bottom plate. Connections for terminal 1-10, see table. Connections for terminal 11-20 depend on the selected mode, see table in the corresponding chapter.

The Ultrasound Controller should be installed in accordance with national regulations. A person with the required knowledge should perform the installation.

D128, G128 terminal	Description
1	+ supply PLUS
2	– supply MINUS
3	Relay common
4	Relay 1
5	Relay 2
6	Relay 3
7	Relay 4
8	mA output MINUS
9	+ 4-20mA output A
10	+ 4-20mA output B

1	Enclosure
2	Gasket
3	Bottom plate
4	Screws (x8)
5	Terminals
6	Dummy coverings
7,8	Cable glands (small and big)
9	Pressure compensation element

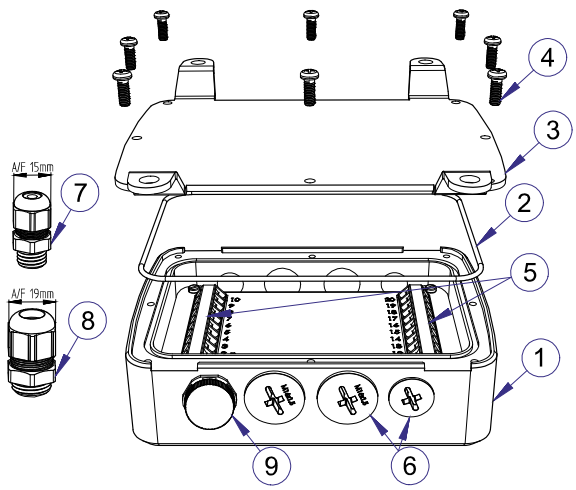

3. Navigating the menu system

Toggle between standby and power-on. (D128 only)	Go back to previous menu-level or Cancel a Selected operation	Scroll through menu-text, parameter-names or parameter-values	Select a menu or Confirm the selection of a parameter-value

Keep MENU button pressed to scroll continuously. Press BACK button while pressing MENU button to scroll backwards. Menu-text, parameter-names and parameter-values as seen on the display is ***in the manual written in blue italic.***

Sensor MODE and the start-screen

When power is applied to the Ultrasound Controller it displays the software version on the LCD-display, followed by the start-screen. Depending on which mode is set; the corresponding start-screen will be shown. The Ultrasound Controller can be set to either Air Sensor mode, Level Switch mode, Level Sensor mode or Gel Sensor mode. When the Ultrasound Controller is powered on for the first time ***Set sensor MODE*** is displayed. Then press MENU button to scroll to the desired mode and press SELECT button. How to change sensor mode once it has been set is described in ***ADVANCED SETTINGS***.

Air Sensor mode

CALIBRATION
- Calibrate LIQUID AS 1
- Calibrate AIR AS 1
- Calibrate LIQUID AS 2
- Calibrate AIR AS 2

SHOW DATA
- Air Sensor 1
  - Calibration Data
  - Normal Measurement Data
  - Very Low Sensitivity Data
- Air Sensor 2
  - *same as above*
- AUXILIARY DATA

SETTINGS
- SET Air Sensor 1 parameters
  - SET TYPE
  - SET DIAMETER
  - SET SENSITIVITY
  - SET FILTER
- SET Air Sensor 2 parameters
  - *same as above*
- SET RELAY 1
- SET RELAY 2
- SET RELAY 3
- SET RELAY 4
- SET mA output A
- SET mA output B

HELP
- CONNECTOR Terminals 1-7
- CONNECTOR Terminals 8-17
- Information
- Software version

ADVANCED SETTINGS
- set sensor MODE
- SIMULATE
- RESTORE settings and calibrations
- PROFIBUS SETTING
  - BITRATE
  - ADDRESS
  - PARAMETER ACCESS
  - CONTROL

Level Switch mode

CALIBRATION
- CALIBRATE with AIR (empty)
  - Level Switch 1
  - Level Switch 2
  - Level Switch 3
  - Level Switch 4
  - LS1-LS4 together
- CALIBRATE with LIQUID (full)
  - *same as above*

SHOW DATA
- LevelSwitch 1
  - Echo DATA
  - WR DATA
  - Auxiliary data
- LevelSwitch 2 *same as above*
- LevelSwitch 3 *same as above*
- LevelSwitch 4 *same as above*
- Test LevelSwitch

SETTINGS
- SET parameters LevelSwitch 1
  - SET Type AND Technique
  - SET FILTER
  - SET ECHO-DISTANCE
  - SET Jacket
  - SET FREQUENCY
- SET parameters LevelSwitch 2
- SET parameters LevelSwitch 3
- SET parameters LevelSwitch 4
  - *same as above*
- SET RELAY 1
- SET RELAY 2
- SET RELAY 3
- SET RELAY 4

HELP
- CONNECTOR terminals 1-7
- CONNECTOR terminals 8-17
- Information
- Software version

ADVANCED SETTINGS
- Set sensor MODE
- SIMULATE
- RESTORE settings and calibrations
- PROFIBUS SETTING
  - BITRATE
  - ADDRESS
  - PARAMETER ACCESS
  - CONTROL

Level Sensor mode

CALIBRATION
- CALIBRATE with LIQUID >100mm
  - Cal Sensor 1 & 2 (Lev & Vel)
  - Cal Sensor 3 & 4 (Lev& Vel)
- CALIBRATE with AIR
  - Cal Sensor 2 (Vel)
  - Cal Sensor 4 (Vel)

SHOW DATA
- Sensor 1 & 2
  - Measured Level Sensor 1
  - Calibrated Level Sensor 1
  - Measured Velo Sensor 2
  - Calibrated Velo Sensor 2
- Sensor 3 & 4
  - *same as above*

SETTINGS
- SET parameters Sensor 1 & 2
  - SET Range
  - SET Offset
  - SET WR threshold
  - SET Liquid SoundVELOCITY
  - SET Sensor 2 InnerDISTANCE
  - SET Sensor 2 Sensor HEIGHT
  - SET Sensor 2 Sensor Control
  - SET Sensor 1 Bottom THICKNESS
  - SET Sensor 2 Wall THICKNESS
  - SET Sensor 1 FREQUENCY
  - SET Sensor 2 FREQUENCY
- SET parameters Sensor 3 & 4
  - *same as above*
- SET RELAY 1
- SET RELAY 2
- SET RELAY 3
- SET RELAY 4
- SET mA output A
- SET mA output B

HELP
- CONNECTOR Terminals 1-7
- CONNECTOR Terminals 8-17
- Information
- Software version

ADVANCED SETTINGS
- set sensor MODE
- RESTORE settings and calibrations
- PROFIBUS SETTING
  - BITRATE
  - ADDRESS
  - PARAMETER ACCESS
  - CONTROL

Gel Sensor mode

CALIBRATION
- 1-4 together
- GelSensor 1
- GelSensor 2
- GelSensor 3
- GelSensor 4

SHOW DATA
- Gel Sensor Measured data
  - Gelconcentration %
  - Relativ Signal %
  - Relativ Attenuation dB/m
  - Signal dB
  - Liq WR sensor
- Gel Sensor Cal Data
  - Cal Liquid dB
  - Freq
  - Test Sensor dB

SETTINGS
- SET parameters Sensor 1
  - SET TYPE
  - SET ECHO DISTANCE
  - SET GEL-TYPE
  - SET GEL-THRESHOLD
  - SET FREQUENCY
  - SET WR THRESHOLD
  - SET RELAY1,2
  - SET RELAY3,4
  - SET mA output A
  - SET mA output B

HELP
- CONNECTOR Terminals 1-7
- CONNECTOR Terminals 8-17
- Information
- Software version

ADVANCED SETTINGS
- set sensor MODE
- RESTORE settings and calibrations
- PROFIBUS SETTING
  - BITRATE
  - ADDRESS
  - PARAMETER ACCESS
  - CONTROL

4. Electric Noise

Ground Connection and Sensor Cable

Connect terminal 16 on the D72, DP72, G72 or terminal 19 on D128, G128 to ground, near the transmitter.

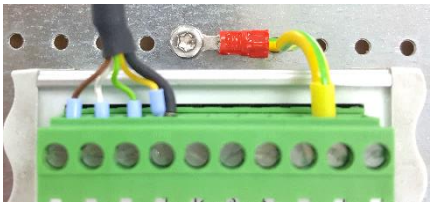

Electric noise entering the sensor cable can cause measurement problems and should be minimized as much as possible.

All sensor cables must be shielded. The unshielded part of the cable, where it connects to the Ultrasound Controller, should be maximum 40mm. The sensor cable may not be extended.

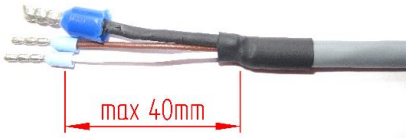

Do not route the sensor cable along any cable between a motor and a variable frequency drive.

Noise from Variable Frequency Drives

Most noise is produced by variable frequency drives as they control the speed of motors. The noise exists in the cable between the variable frequency drive and the motor. This cable must be shielded and its routing should not be along sensor cables. To reduce ground current noise, a common mode filter can be used. The filter consists of ferrite toroid inserted on the wires connected to the outputs of the variable frequency drive. Ground current noise is caused by noise travelling capacitively to ground in the cable shield and in the motor.

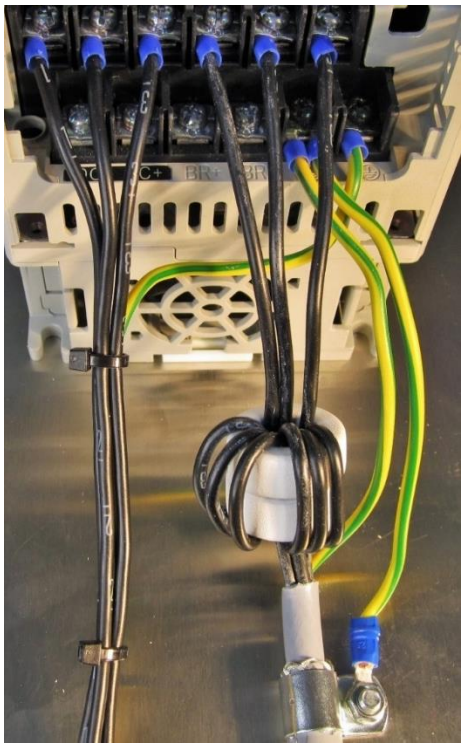

An efficient common mode filter can be seen in the picture. It is made of two ferrite toroids with the three output wires winded three times together through the toroid. The ground wire connects directly to the variable frequency drive ground terminal and do not go through the toroid. The shield of the cable connects to cabinet ground and to the variable frequency drive ground terminal via a short cable. The filter is placed close to the output of the variable frequency drive on the cable connecting the motor.

The filter in the picture consist of two Ferroxcube toroid TN25/15/10-3F3 and it is suitable for wires up to 2,5mm2. Alternatively, EPCOS toroid B64290L616X830 can be used. If the wires do not fit, larger toroid can be used. Ferroxcube toroid of material 3F3 or EPCOS toroid of material N30 or Amidon toroid of material 77 are suitable.

5. Ex-installation with ex-barriers

Ex-barriers are not shielded and if ex-barriers are used, Ex-barrier shields must be inserted on each side of the group of EX-barriers connected to each Ultrasound Controller (see picture). The ex-barrier connects the sensor cable shield to ground which makes it possible for ground currents to enter. Because of this, minimizing ground currents is very important when EX-barriers are used.

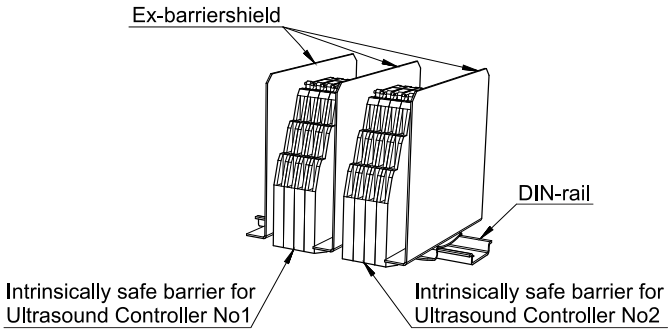

6. Air Sensor Mode

In Air Sensor mode the Air Sensor is used to measure the presence of bubbles in flowing liquid. One or two Air Sensors model SAC, CCS, PAC, FCS or FCP can be connected to one Ultrasound Controller.

Quick start guide

- Install Air Sensors according to instructions in the Air Sensor Manual.
- Connect cables, see page 7 or 9 and 13.
- Switch on external power supply.
- Read about navigating the menu system, page 10.
- If display show: ***SET sensor MODE***. Choose ***Press SELECT for Air Sensor mode*** by scrolling with MENU button and selecting with SELECT button.
- Go to ***SETTINGS*** see page 15 and set all parameter that need to be set.
- Fill Air Sensor 1 (AS1) with liquid. Select ***Calibrate LIQUID AS1*** and Press SELECT button one second.
- Empty Air Sensor 1 (AS1) of liquid. Select ***Calibrate AIR AS1*** and press SELECT button one second.
- Do the calibration in the same way for Air sensor 2 (AS2). The calibration can be done in any order as long as both air and liquid will be calibrated.
- A simple validation: AIR should be indicated when the Air Sensor is empty and LIQUID when it is filled with liquid.
- Go to ***SHOW DATA*** for a more thorough validation of the calibrated values, see page 17.
- Ready.

Functional Description

Bubbles in the liquid flowing through the Air Sensor are monitored by the use of ultrasound. Inside the Air Sensor two low intensity beams of ultrasound are transmitted across the liquid-path in directions perpendicular to the liquid flow.

If a bubble moves into one of the ultrasound-beams the ultrasound will be partially deflected and the intensity of the ultrasound decreases. The controller constantly measures the intensity of the ultrasound and if the intensity becomes lower than the threshold it detects a bubble. Dense particles in the liquid can also deflect the ultrasound in a similar way and can therefore be detected.

The measurements of very low sensitivity and very very low sensitivity uses a different measurement technique. It measures how ultrasound vibrations in the Air Sensor walls are dampened by the presence of liquid inside.

The measurement accuracy depend on how well the Air Sensor is calibrated, the flow-rate, the type of liquid, how the Air Sensor is mounted and weather there is a single bubble or many bubbles and the Air Sensor size.

Orientation of the Air Sensor

If the Air Sensor is mounted horizontally orientation is important. Liquid flowing through the Air Sensor tends to pull bubbles towards the center of the tube but when flow rate decrease bubbles rises to the top. The Air Sensor is more sensitive to bubbles at the top if it is rotated so that the cable connector (and label) is facing up. If instead low bubble sensitivity is desirable rotate the Air

Sensor so that the cable connector (and label) is facing down. This makes the Air Sensor less sensitive for bubbles at the upper part of the tube.

Connecting the Air Sensor

Maximum cable length depends on the Air Sensor, see Air Sensor manual. The Air Sensor cable can be ordered in different length and should not be extended. The unshielded part of the cable should be no longer than 40mm. The shield shall if possible be connected to ground via shielded cable glands. If shielded cable glands are not used, a separate cable can be used to connect to cabinet ground (D72 terminal 16). PAC needs a 50mm jumper cable between two terminals. To minimize the risk of electric interference and noise, see Electric Noise page 11.

Terminal number			Cable Color					
D72 DP72	D128		SAC	PAC	FCP	FCS	CCS	DAP
8	11	Air Sensor 1	Brown	Brown	Brown	Brown	Brown	Brown
9	12		White	White & Jumper A	Shield of Brown & Shield of Green	Shield of Brown & Shield of Green	White	White
10	13		Green	Green	Green	Green	Black	Green
11	14		Yellow & Shield	Shield & Jumper A	Shield of White (Yellow not used)	Shield of White & Shield of Yellow	Blue & Shield	Shield
12	15			Yellow	White	Yellow & (White not used)		Yellow
13	16	Air Sensor 2	Brown	Brown	Brown	Brown	Brown	Brown
14	17		White	White & Jumper B	Shield of Brown & Shield of Green	Shield of Brown & Shield of Green	White	White
15	18		Green	Green	Green	Green	Black	Green
16	19		Yellow & Shield & Ground	Shield & Jumper B & Ground	Shield of White & (Yellow not used) & Ground	Shield of White & Shield of Yellow & Ground	Blue & Shield & Ground	Shield & Ground
17	20			Yellow	White	Yellow & (White not used)		Yellow

Connecting the Air Sensor Ex via Ex-barrier

In hazardous area, intrinsically safe barriers must be used to connect SAC Ex, CCS Ex or FCS Ex to the Ultrasound Controller. In this table connection is shown for a dual channel zener ex-barrier (channel A and B). Read Air Sensor Ex Manual about how to select the barrier and how to

connect the Air Sensor Ex to the barrier. To minimize the risk of electric interference and noise, see Electric Noise page 11.

Terminal number			Cable Color			
D72 DP72	D128		Dual channel zener Ex-Barriers	SAC Ex or CCS Ex	Dual channel zener Ex-Barriers	FCS Ex
8	11	Air Sensor 1	Channel A	Brown	Channel A	White
9	12		Ground	White	Ground	Shield of White & Shield of Yellow
10	13		Channel B	Green	Channel B	Yellow
11	14		Ground	Yellow & Shield	Ground	Brown & Green and Shield of Brown & Shield of Green
12	15					
13	16	Air Sensor 2	Channel A	Brown	Channel A	White
14	17		Ground	White	Ground	Shield of White & Shield of Yellow
15	18		Channel B	Green	Channel B	Yellow
16	19		Ground	Yellow & Shield	Ground	Brown & Green and Shield of Brown & Shield of Green
17	20					

Setting lowest possible sensitivity for bubbles

If mounted horizontally rotate the Air Sensor so that the cable connector is facing down.

The ***FILTER*** setting determines the delay (response time) for detecting air. Set ***FILTER*** to ***delay 0,3s*** or longer depending on maximum acceptable delay (do not set it to integrate). Bubbles that quickly come and go will then pass undetected.

Set the ***SENSITIVITY*** to ***low***. ***SENSITIVITY*** can also be set to ***very low*** or ***very very low***, but these settings uses a different measurement technique where the presence of liquid is detected regardless of bubbles. This technique is sensitive to temperature changes and works only on diameters > 16mm. Don't use it if there is more than +- 5°C temperature variation during measurement and calibration. Try first set ***SENSITIVITY*** to ***low*** and ***FILTER*** to ***delay 0,3s*** or longer. If there are still unwanted detections of bubbles, then change the setting of ***SENSITIVITY*** to ***very low*** or ***very very low***.

SETTINGS

Through the ***SETTINGS***-menu the parameters of the Air Sensor can be set.

Select ***SET TYPE*** to set the type of Air Sensor connected. This tells the Ultrasound Controller to make the correct adjustments for this Air Sensor type.

Select ***SET DIAMETER*** to set it to the diameter of the connected Air Sensor or as close as possible. This tells the Ultrasound Controller to make the correct adjustments for this Air Sensor diameter.

Select ***SET SENSITIVITY*** to set the sensitivity. This determines how sensitive the Air Sensor is for bubbles.

SENSITIVITY can be set to ***high***, ***medium***, ***low***, ***very low*** and ***very very low***. Detectable bubble size is somewhat dependent on Air Sensor inner diameter:

At ***high*** sensitivity, a single bubble of approximately 5µl can be detected
(SAC10: 1µl, SAC22: 6µl, SAC35: 8µl)

At ***medium*** sensitivity, a single bubble of approximately 20µl can be detected
(SAC10: 10µl, SAC22: 30µl, SAC35: 40µl)

At ***low*** sensitivity, a single bubble of approximately 700µl can be detected.
(SAC10: 500µl, SAC22: 900µl, SAC35: 1000µl)

Low sensitivity is achieved by requiring both detectors inside the Air Sensor to detect bubbles at the same time. Many small bubbles together will be detected as if they were a single big bubble. Even tiny (microscopic almost invisible) bubbles will be detected if there are many of them.

High, ***medium*** and ***low*** sensitivity are the normal measurements.

At ***very low*** and ***very very low*** sensitivity a different measuring technique is used (WR-technique). This technique measures the presence of liquid or no liquid, making the Air Sensor very insensitive for bubbles. It can be used only for Air Sensors with diameter ≥ 22mm. It also have temperature dependence and should not be used if there are temperature variations of more than ±5ºC.

Select ***SET FILTER*** to set the filter-time. It determines how the measurement-data is filtered. ***FILTER*** can be set to either ***integrate 1ms*** - ***3s*** or ***delay 300ms*** - ***10s***.

Integrate means integrating (adding) the duration of each bubble. When the sum becomes higher than the integrate time, air will be indicated. When liquid is next time indicated, the integration-process starts over.

Delay means that air will be indicated when air has been continuously detected for a time longer than the delay time.

Long ***FILTER delay*** and low ***SENSITIVITY*** is useful if some quantities of bubbles should be undetected.

Short ***FILTER integrate*** and high ***SENSITIVITY*** is useful when almost every bubble should be detected.

Select ***SET RELAY*** to set how the relays should act. There are four relays each with one normally open contact (at power off and when sensor is not connected the relay is open). Each relay can be set independently. Choose between Closed with air or closed with liquid and choose between Air Sensor 1 and Air Sensor 2. The duration of air being indicated is minimum 0,5 second even if the bubble is detected much shorter time (to make sure the indication of air is registered).

Select ***SET mA output*** to set the assignment of the mA-outputs. There are two outputs: A and B. They can be assigned to ***Air Sensor 1*** or ***Air Sensor 2*** and ***Normal Measurement Data*** or ***All Sensitivities***

Normal Measurement Data Assigns a combination of the analog ***Ndata*** during the time liquid is indicated and 6mA when air is indicated:

8mA – 20mA = ***Ndata*** = 0% – 150% during the time Liquid is indicated

6mA = when Air is indicated
4mA = error

All Sensitivities Assigns bubble sizes to mA.

16mA = Liquid (no bubble)
12mA = medium bubble
8mA = very big bubble
4mA = error.
14mA = small bubble
10mA = big bubble
6mA = very very big bubble

The bubble indication time is always minimum 0,5 second.

Air Sensor start-screen

```
1 AIR    AirSens
2 ---        1234
```

When power is applied, the Air Sensor start-screen is displayed showing something like this:

On the first line to the right is written AirSens meaning this is Air Sensor-mode. The first digit to the left indicates Air Sensor 1 and Air Sensor 2. Following the digit is diagnostic information about each Air Sensor:

---	No Air Sensor is connected and ***Air Sensor TYPE*** or ***DIAMETER*** is set to ***no Air Sensor***
set	Settings are missing
cal	Waiting for calibration to be done
CalAir	Waiting for calibration of Air to be done
CalLiq	Waiting for calibration of Liquid to be done
err 1	Error, no Air Sensor is detected
err 2	Error, ***NAir*** too high, see troubleshooting
err 3	Error, ***VLthld*** too low, see troubleshooting
err 4	Error, ***NLiq*** too low, see troubleshooting
SetErr	Error, wrong settings, see troubleshooting
AIR	Air or bubble is detected
LIQUID	Liquid without bubble is detected.

(LIQUID is blinking if measurement data is higher than 200% suggesting a new calibration may be advisable)

On the second line to the right is written 1234 which shows the state of each of the four relays. A light digit on dark signifies a closed relay.

ADVANCED SETTINGS

Select ***Set sensor MODE*** to set either ***Air Sensor mode***, ***Level Switch mode***, ***Level Sensor mode*** or ***Gel Sensor mode mode***. It determines which sensor can be connected.

Select ***SIMULATE*** to simulate detection of air or liquid. Press SELECT button to toggle between simulation of AIR and LIQ. Press MENU button to change between Air Sensor 1 and 2.

Select ***RESTORE settings and calibrations*** to restore all settings and calibrations to factory-settings.

Select ***PROFIBUS SETTINGS*** see page 41 (for DP72).

CALIBRATION

Calibration must be done both with air (with empty Air Sensor) and liquid (with full Air Sensor) and it can be done in any order. To calibrate liquid, make sure there is liquid inside the Air Sensor and

select ***calibrate LIQUID*** (and press SELECT button one second). To calibrate air make sure the Air Sensor is empty and select ***calibrate AIR*** (and press SELECT button one second). During calibration of liquid, Ultrasound Controller adjusts the intensity of the ultrasound to become 100%. Each Air Sensor should be calibrated after installation. After the calibration it is advisable also to check the values in ***SHOW DATA*** (see below).

A new calibration of liquid may be required if the liquid properties has changed significantly since the last calibration. For the Air Sensor PAC or FCP a temperature change over 20ºC requires a new calibration of liquid.

SHOW DATA

There are two measurement techniques, normal measurement and very low sensitivity measurement. These are then doubled into two perpendicular measurements for increased reliability and sensitivity.

During normal measurement a beam of ultrasound is transmitted and the echo is amplified. A bubble scatters the sound causing reduced intensity. This is how a bubble is being detected.

During very low sensitivity measurements the Air Sensor transmits ultrasound and listens to how quickly vibrations inside the walls of the Air Sensor disappear into the liquid.

Calibration Data

The Calibration Data page shows calibration data from normal measurement. Calibration data is measured and stored during calibration. The two data on each line correspond to the two perpendicular measurements.

On the first line is ***NLiq*** which is the ultrasound strength measured in dB with liquid in the Air Sensor. ***NLiq*** is usually around 40dB, depending on type of Air Sensor. A high value means strong sound which is better than a low value. Check that ***NLiq*** is higher than 30dB for SAC and FCS, higher than 18dB for SAC Ex, CCS Ex or FCS Ex, higher than 19dB for PAC and FCP.

On the second line is ***NAir*** which is the relative sound strength, relative to ***NLiq***, with air in the Air Sensor. Ideally ***NAir*** should be 0% but as sound travels around the walls it will not be 0%. Check that ***NAir*** is less than 15%.

Normal Measurement Data

This page shows the current normal measurement data, ***Ndata*** (The two data correspond to the two perpendicular measurements). It is the relative ultrasound strength (relative to ***NLiq***). With liquid in the Air Sensor, it should be near 100%, depending on the liquid. All liquids do not conduct sound equally well. If ***Ndata*** with liquid is > 130% or if it is < 80% it is advisable to calibrate the Air Sensor with liquid again.

With air in the Air Sensor, ***Ndata*** should be less than 15%. The threshold at which air bubble is detected depend on sensitivity setting and type and size of Air Sensor (approximately at high sensitivity threshold is 44% and at low sensitivity threshold is 27%).

Very Low Sensitivity Data

This page shows data from the very low sensitivity measurement. This measurement technique is different from the normal measurement technique and is used only for ***very low*** and ***very very low sensitivity*** settings. The two data on each line correspond to the two perpendicular measurements.

On the first line is ***VLdata*** showing the current measured ultrasound strength.

On the second line is ***VLthld*** showing the threshold. ***VLthld*** is measured and stored during calibration. Liquid is detected when ***VLdata*** is > ***VLthld***. For reliable operation ***VLthld*** should be > 5.

AUXILIARY DATA

This page shows unprocessed data from the Air Sensor. It can be used for troubleshooting when contacting AQ M-Tech AB.

HELP

Select ***HELP*** to show information about how to connect the Ultrasound Controller.

Sound velocity in the Air Sensor

With sensitivity set to ***low***, ***medium*** or ***high*** and with two liquids having different sound velocities in the Air Sensor and with these liquids not well mixed, there can be false indication of air. The sound is refracted due to velocity change, as it travels from one liquid to another. Setting longer filter times and lower sensitivity can reduce such false indications of air.

Air Sensor TROUBLESHOOTING

Air or Liquid is indicated on the display but the relay does not change = ***RELAY*** setting is wrong.

Display shows:

Cal Calibration should be done.

CalAir Calibration Air should be done.

CalLiq Calibration Liquid should be done.

Set Settings of TYPE or DIAMETER is missing

err 1 No Air Sensor is detected. The reason for this can be wrongly connected Air Sensor, or faulty Air Sensor.

err 2 The relative signal with Air is too strong (at ***low***, ***medium*** or ***high*** sensitivity). ***err 2*** is shown if ***NAir*** is higher than 21-25%.
The reason for high ***NAir*** can be:
Calibration of AIR has been done with liquid in the Air Sensor. Or Wrong settings of Air Sensor Type or Diameter. Or electric interference. Or a faulty Air Sensor. Or calibration of LIQUID has been done with liquid having lots of bubbles or particles attenuating the sound.
Electric interference will show itself as ***Ndata*** being unstable with Air in the Air Sensor. To minimize the risk of interference it is important that sources of interference like frequency inverters should use shielded cables between inverter and motor. Also any unshielded part of the cable between the Air Sensor and Ultrasound Controller should be short. If ex-barriers are used, Ex-barriershields must be used especially if there is more than one Ultrasound Controller.

err 3 There is not enough signal difference between air and liquid (at ***very low*** or ***very very low sensitivity***). ***err 3*** is shown if ***Very Low*** sensitivity threshold is not high enough for reliable measurement (***VLthld***<6). Air Sensor with diameter less than 22mm may have difficulty measuring at very low sensitivity. Change ***SENSITIVITY*** to ***low***, ***medium*** or ***high*** instead.

err 4 The absolute signal with Liquid is too weak (at ***low***, ***medium*** or ***high*** sensitivity). err 4 is shown if the calibrated data with Liquid, ***NLiq*** is lower than 31dB for SAC and FCS or 19dB for SAC Ex, CCS Ex and FCS Ex or lower than 18dB for PAC and FCP.
The reason for this can be: Calibration of LIQUID has been done with air or liquid having lots of bubbles or particles attenuating the sound. Or wrong settings of Air Sensor Type or Diameter. Or Air Sensor is wrongly connected. Or Air Sensor is faulty

SetErr Air Sensor DAP can not be used together with another type of Air Sensor. When ***TYPE*** is set to ***DAP*** on one Air Sensor, the other must be set also to ***DAP*** or to ***No Air Sensor***.

7. Level Switch Mode

In Level Switch Mode the Level Switch measures a single level from the side of the container. It measures the presence or no presence of liquid behind the container (or pipe) wall. The Level Switch senses through the wall AND no hole is needed. Four Level Switches can be connected to one Ultrasound Controller.

Quick start guide

- Install Level Switches according to instructions in the Level Switch Manual.
- Attach the included tape, see page 21
- Connect cables, see page 7 or 9 and 19.
- Switch on external power supply. You may have to press POWER to exit standby on D128.
- Read about navigating the menu system, page 10
- If display show: ***SET sensor MODE***. Choose ***Press SELECT for Air LevelSwitchmode*** by scrolling with MENU button and selecting with SELECT button.
- Go to ***SETTINGS*** see page 22 and set all parameter that need to be set.
- Now calibrate Level Switch 1. Make sure liquid level is below the Level Switch. Select ***CALIBRATE with AIR (empty)*** then select ***Calibrate AIR Level Switch1*** and press SELECT button one second.
- Make sure liquid level is above the Level Switch. Select ***CALIBRATE with LIQUID (full)*** then select ***Calibrate LIQUID Level Switch1*** and press SELECT button one second.
- Do the calibration for all connected Level Switches. The calibration order air/liquid and Level Switch number can be mixed.
- Go to ***SHOW DATA*** to check calibrated values, page17
- Ready.

Connecting the Level Switch

The Level Switch cable may not be extended. Maximum cable length, see Level Switch manual. The unshielded part of the cable should be no longer than 40mm. The shield shall if possible be connected to ground via shielded cable glands. (Yellow and green wire are not used.) To minimize the risk of electric interference and noise, especially in ex-installation, see Electric Noise page 11.

Connect terminal 16 on the D72, DP72, G72 or terminal 19 on D128, G128 to ground, near the transmitter.

Ultrasound Controller Terminal		Level Switch Cable
D72 DP72	**D128**	**Cable Color**
8	11	Sensor **1** Brown
9	12	Sensor **1** White
10	13	Sensor **2** Brown
11	14	Sensor **1** Shield & Sensor **2** Shield
12	15	Sensor **2** White
13	16	Sensor **3** Brown
14	17	Sensor **3** White
15	18	Sensor **4** Brown
16	19	Sensor **3** Shield & Sensor **4** Shield & Ground
17	20	Sensor **4** White

Level Switch Type and Technique

There are two different measuring techniques: Echo and WR (Wall Reverberate). The different Level Switches are optimized for eather technique. Level Switch RS is made for the WR-technique and do not work with Echo-technique. Level Switch MK has a soft silicone surface adapting to the container surface and works with Echo-technique and does not work so well with the WR-technique. Level Switch KS and LS works well with Echo-technique and in some cases, they also work with the WR-technique.

Echo Technique

The echo-technique uses echo from a reflecting surface inside the container (usually the opposite container wall) to determine if there is liquid or not inside. All types of Level Switch except Level Switch RS can be used.

The echo-technique transmits short sounds and then measures the echo bouncing on the opposite reflecting surface. With liquid inside, there is an echo and with no liquid there is no echo. If the liquid attenuates the sound too much the echo may disappear. Small bubbles and particles in the liquid can cause attenuation and unmixed liquids having different sound velocities can cause refraction of the sound and thereby the echo disappear resulting in wrong indication of low level. It is important that the sound-beam from the sensor is reflected, back to the sensor and not diverted in the wrong direction.

It is desirable that the ultrasound passes as easy as possible through the container wall. How well it passes depend on the wall material and thickness. Steel or glass wall should be in the range 1,2mm - 15 mm and plastic wall <15mm (PP<10mm). Plastic with fiberglass can be troublesome. Testing on the actual container is recommended. Any welding or other unevenness in the wall should be avoided as it can refract (bend) the sound-beam in an unwanted direction.

The ultrasound beam behaves similar to a light-beam, the direction of the echo depend on from what angle it hits the reflecting surface. Obstructing object in the path between sensor and the reflecting surface should be avoided. The sound beam is approximately 1cm in diameter. A tube in the center of the container can give an echo but it is weak. In case there are obstructing objects inside the container, perhaps the Level Switch RS with the WR-technique is a better choice.

On small containers, disturbing background echoes becomes stronger in relation to the echo. Level Switch LS and KS should therefore not be used on containers smaller than 44mm diameter.

WR Technique

The WR technique measures vibrations in the container wall to determine if there is liquid or not behind the wall. Level Switch RS should be used. However, on plastic walls Level Switch KS or LS can also be used and Level Switch MK only if it is mounted steady.

The WR-technique transmits sound and then measures how quickly vibrations in the container wall disappear. Vibrations in the wall disappear more quickly with liquid inside due to the dampening effect of the liquid. The WR-technique works with most liquids since the sound does not have to travel through the liquid. But the WR-technique is dependent on the material and thickness of the wall. Steel or glass wall 1,2mm - 15 mm or plastic wall < 15mm (PP<10mm) should be ok. Fiberglass-plastic could be troublesome and testing on the actual container is recommended. WR technique has quite high temperature dependence, depending on wall material, and should not be used if temperature differ more than 15ºC from temperature during calibration.

On plastic walls it is also possible to use Level Switch KS with the WR-technique. Level Switch KS can also be used with the WR-technique on a container with jacket to sense the presence of liquid in the inner container (if the gap between the jacket and the container is filled with liquid).

The WR-technique measures small signal changes and is sensitive to small movements of the Level Switch, therefore the Level Switch should be steady attached. Ideally the Level Switch KS and LS can therefore be glued with silicone. If the Level Switch MK is used it must be attached steady. The WR-technique can also be sensitive to liquid drops remaining on the inside of the wall and is sensitive to temperature changes. The advantage of the WR-technique is it is independent of liquid sound-properties and independent of bubbles and there is no need for a reflecting surface.

Mounting the Level Switch

Between the Level Switch and the container there must be a tight ultrasound-connection. For Level Switch MK, this is achieved with a soft silicone surface. For the other Level Switches, it is achieved by using glue or compound.

Mounting Level Switch MK

For attaching the Level Switch MK no glue or compound is needed. The Level Switch MK has a flexible surface which acieves a good ultrasound-connection when it is pressed against the container. The pressure needs to be around 15N (minimum 5N and maximum 50N), depending also on the shape of the container. The pressure makes the flexible surface adapt to the container. It is important the Level Switch MK is held in place with a fixture. The fixture should provide the means for applying the pressure on the Level Switch so it will be pressed against the container. Since the Level Switch MK has a rounded surface, the fixture need also to hold the Level Switch MK straight in place. A possible fixture is a plastic block adapted to the shape of the container, with a 25,1mm hole for the Level Switch. More information about how the Level Switch MK can be used for measuring is available in Ultrasound Controller manual.

Mounting Level Switch KS / KSF / RS / RSF / CF / LS / LSF

Gluing the Level Switch is best attachment technique. Transparent silicone glue is heat-resistant and is a good glue at all temperatures. A Level Switch glued with silicone is easy to remove. The silicone glue can be Loctite 5366 or a similar transparent (1-component moisture curing) silicone. It can take a few days to cure but the Level Switch can be used while the silicone is curing. Put some silicone on the container-facing side of the Level Switch and press it on to the container. The silicone should completely cover the gap between the Level Switch and the container. During the first hours, the Level Switch must be held securely in place with something like a tape or so.

Transparent 1-component MS-polymer can also be used if temperature is not above 80°C. It is flexible like silicone and takes some days to cure.

Hard glues should be avoided since they can come loose by temperature variations.

If the Level Switch is not glued, Sonotech SONO 600 can be used, or Electrolube Heat Transfer Compound. It does not cure so the Level Switch must be held in place by other means. If the Level Switch is removed, the old compound should be wiped off and new used next time. These compounds are not recommended at temperatures above 60°C.

More information about how the Level Switch can be used for measuring is available in Ultrasound Controller manual.

Level Switch RS can only be used with the measuring technique WR, which is sensitive for small movements so gluing the Level Switch RS is recommended.

Stainless Steel and Glass Containers

When the Level Switch is mounted on a stainless steel or glass container and the echo-technique is used, it is advisable to also attach a sound absorbing tape on the container. The tape will supress unwanted sound travelling along the container and thereby improve the measurements (the ***Edata*** will be lower with air, making threshold ***Ethd*** also lower, which is good). The 3M tape 8671 is suitable for this purpose. It withstands high temperature 135°C. The tape is transparent and

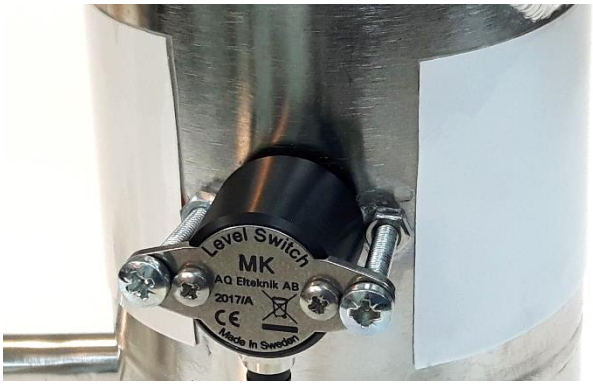

can be removed without leaving any trace. The picture shows the tape with the protective paper still attached. It should be placed centered over the Level Switch and go around the container, starting and ending near the Level Switch. The important area to cover is about 100mm on each side, close to the Level Switch. On a big container, if the tape is too short, it can be cut in two pieces and placed on each side of the Level Switch. The tape is 50,8mm wide and one tape should be used for each Level Switch. Attaching tape above or below the Level Switch does not help. The tape is supplied with the Level Switch in 500mm length and can also be ordered separately from AQ M-Tech, order number 101310. The material is polyurethane. Acetone should not be used for cleaning the tape.

Level Switch start-screen

When power is applied, the Level Switch start-screen is displayed showing Lev Sw on first line to the right signifying this is Level Switch start-screen. . On the second line to the right is written 1234 which shows the state of each of the four relays. A dark background signifies a closed relay.

To the left are four small digits signifying Level Switch 1 2 3 and 4 with three-letter-text following each digit showing information about each Level Switch:

AIR	air is detected
LIQ	liquid is detected
cal	Waiting for calibration of Air and/or Liquid
set	parameters need to be set
--	Level Switch disconnected
err	error – see troubleshooting
	Level Switch is not existing

```
1 LIQ 3 cal   Lev Sw
2 set 4       1234
```

Example: Level Switch 1 detecting liquid, Level Switch 2 connected but not set, Level Switch 3 need to be calibrated, Level Switch 4 not existing, Relay1 closed.

SETTINGS

Through the SETTINGS-menu the parameters of the Level Switch can be set.

Select ***SET Type AND Technique*** to set it to either ***Type: KS or LS, Technique: ECHO*** or ***Type: RS, Technique: WR*** or ***Type KS or LS, Technique WR*** or ***No Level Switch***.

Select ***SET DISTANCE to reflecting wall*** to set it between ***46mm*** (minimum) and ***600mm*** (maximum). This parameter is needed if the “ECHO” technique is chosen and should be set to actual distance. It does not have to be exact, just use the nearest value. If Technique is set to WR this setting is not needed.

Select ***SET FILTER*** to set the filter-time between ***0,5s 1s 2s*** or ***4s***. It determines how fast the Level Switch detects air or liquid.

Select ***SET Jacket*** to set the distance in mm between jacket and container. Set it only if the container has a jacket.

Select ***SET FREQUENCY*** to set the measurement frequency. This setting is dependent of the container wall material and thickness. Usually it can be set to Auto unless a particular frequency is known to be the best. ***1***=1,3MHz, ***2***=1,5MHz, ***3***=1,7MHz, ***4***=2,0MHz or ***5***=2,2MHz). Changing the ***FREQUENCY*** does not change the calibration.

Select ***SET RELAY*** to set how the relays should act. Each relay have one normally open contact (at power off and when sensor is not connected the relay is open).). There are four relays and each relay can be controlled independently by any Level Switch. Choose between Closed with air

or closed with liquid. It is also possible to set one relay to be controlled by two Level Switches. **Example (pump filling a container):** LS1 is placed high and LS2 is placed low on a container. The relay is set to: ***Open LS1 Liq, Closed LS2 Air***. When liquid level drops below LS2, the relay closes (starting the pump to fill the container). When liquid level rises to LS1, the relay opens (stopping the pump).

Example (pump emptying container): LS1 is placed high and LS2 is placed low on a container. The relay is set to: ***Open LS2 Air, Closed LS1 Liq***. When liquid level rises to LS1, the relay closes (starting the pump to empty the container). When liquid level drops to LS2, the relay opens (stopping the pump).

Container with jacket

In a container with a jacket the small space between the container and the jacket is filled with liquid to regulate the temperature of the inner container. This is a special case when a Level Switch KS can use the Technique set to ***WR*** and ***Jacket*** set to the distance between the jacket and container walls. Measurements will then be made on the inner container using the WR technique. The space between the jacket and container must be filled with liquid.

CALIBRATION

Select ***CALIBRATION*** to calibrate the Level Switch. Each Level Switch must be calibrated after installation. Calibration must be done both for liquid and for air. The order or the time between the calibration of air and liquid is of no importance.

A new calibration has to be done if the Level Switch is moved and should be done if the temperature or the liquid properties has changed significantly since the last calibration. To see how well the Level Switch behaves at different temperatures or with a different liquid the measurement data can be checked.

SHOW DATA

Select ***Echo DATA*** to show ***Edata***: echo measurement data (echo strength) relative to ***ELiq***. During calibration it is set to be 100% with liquid. ***Efrq***: shows the frequency (1, 2, 3 or 4). On the second line threshold ***Ethd***: is displayed. If ***Edata*** is higher than ***Ethd*** then liquid is detected. ***ELiq*** shows calibrated echo strength with liquid (0,7dB units). Maximum is 100 and a value of 40 is a weak echo. ***Eliq*** depends on the sensor and the container. ***Ethd*** is best if it is less than 40%. If higher than 60% the difference between echo strength with liquid and air is too low.

Select ***WR DATA*** to show measurement data of the WR-technique. This screen shows first ***Wdata***: WR measurement data. ***Wdata*** is approximately zero when there is air. With Liquid it becomes approximately twice ***Wthld***. ***Wfrq***: shows the frequency that has been chosen either manually or automatically (1, 2, 3 or 4). The best frequency depends on the container wall thickness. On the second line is ***Wthd***: WR threshold which is the value of ***Wdata*** at which indication changes between Air and Liquid. If ***Wdata*** is higher than ***Wthd*** then liquid is indicated. ***Wthd*** is set during calibration to half the value of ***Wdata*** with Liquid. ***Wss***: approximate signal (set at calibration) in 0,3dB units.

Select ***Auxiliary data*** to show raw data from the Level Switch. There are two pages A and B (press MENU button to switch between them).

Select ***Test Level Switch*** to show test-data for the Level Switch when it is not attached to a container. A value is shown for each Level Switch. If the Level Switch is correctly connected a value between 0 and 70 should be shown. Then by pressing on the inner side of the Level Switch with a finger this value should increase if the Level Switch is ok. A Level Switch wrongly connected or unconnected shows a value higher than 100.

ADVANCED SETTINGS

Select ***Set sensor MODE*** to set either ***Air Sensor mode***, ***Level Switch mode***, ***Level Sensor mode*** or ***Gel Sensor mode mode***. It determines which sensor can be connected.

Select ***SIMULATE*** to simulate detection of air or liquid. Press SELECT button to toggle between simulation of Air and Liq. Press MODE button to change between Level Switch 1, 2, 3 and 4.

Select ***RESTORE settings and calibrations*** to restore all settings and calibrations to factory-settings.

Select ***PROFIBUS SETTINGS*** see page 41 (for DP72).

HELP

Select ***HELP*** to show information about connecting the Ultrasound Controller.

Sound velocity and the Level Switch

When ***ECHO Technique*** is used and there are two liquids with significant different sound velocity in the container and these liquids are not well mixed, then there can be a false indication of air because the sound is refracted at the surface between the two liquids. Sound velocity of liquids lies usually within 900-2000m/s. A sound velocity outside this range may be compensated by increasing or decreasing ***DISTANCE to reflecting wall***.

Measurement Reliability

Many factors determine the reliability (wall material, wall thickness, liquid properties, temperature and glue). Therefore it is always advisable to make tests on the actual container under varying conditions and temperatures.

Level Switch TROUBLESHOOTING

Display shows:

-- - The Level Switch is not connected or there is a short circuit.

cal - Calibration has not been done. It must be calibrated both for Air and Liquid before cal disappears.

set - ***Echo technique*** is chosen but the ***DISTANCE to reflecting wall*** is not set.

The relay does not change but the display changes between Air and Liquid. — Wrong setting of ***RELAY***.

err - Measurement cannot be done. During calibration there was not enough difference between the signal with air and with liquid: For ***ECHO technique***, echo threshold ***Ethd*** must be < 50% and for ***WR technique***, WR threshold ***Wthd*** must be > 5. The reason for ***err*** can be:
Calibration was made for Air but there was Liquid in the container or calibration was made for Liquid but there was Air in the container.
The Level Switch is not attached correctly to the container. There is a tiny air-gap between the Level Switch and the container.
If ***ECHO technique*** is chosen and the ***DISTANCE to reflecting wall*** is wrong.
If ***ECHO technique*** is chosen and the echo is reflected in a direction so it does not bounce back to the Level Switch.
If ***ECHO technique*** is chosen and the something is obstruckting the sound beam.
The liquid does not let through enough sound. Try using a Level Switch RS instead of a Level Switch LS.
The container wall does not let through enough sound. Try a different ***FREQUENCY*** or set it to Auto.
Wrong connection or faulty Level Switch. Select ***Test Level Switch*****:** to test the level switch and its connection.

Electric interference can show itself as ***Edata*** being unstable with Air or ***Wdata*** being unstable with liquid. To minimize the risk of interference, see Electric Noise page 11.

Requesting support from AQ M-Tech AB

If the Level Switch is not working properly, support can be requested from AQ M-Tech AB by sending an email requesting support. In this case it is necessary to provide settings and data since this information is needed for AQ M-Tech AB to find a solution for the problem. It can be written down or pictures of the display can be taken. If you don't know how to navigate the menu system, read "Navigating the Menu System" page 10.

Even if settings are supposed to be correct, they may have been changed so it is a good also to check SETTINGS and write them down. Se SETTINGS page 22. In menu ***SETTINGS***, go to each menu page and write down the settings and do this for each Level Switch.

In the menu ***SHOW DATA*** go to menu ***Echo DATA*** and write down all the data shown there and go to menu ***WR DATA*** to write down the data there (WR DATA can be useful to know even if WR-technique is not used). Do this for each Level Switch. Also specify if actual level is high or low if it is known, or even better, write down data for both high and low level. Data from menu ***Auxiliary data*** is not needed.

```
Edata xx%   Efrq x
Ethld xx%   Eliq xx
```

```
Wdata xx    Wfrq x
Wthd  xx    Wss xx
```

Please also add information about which model of Level Switch that is being used, the serial number and software version of the D72/DP72, (see Introduction page 2) and the wall thickness and diameter of the container and the type of material the container is made of. Describe also how the Level Switch is attached to the container (Heat Transfer Compound or glue or ….) and describe if sound absorbing tape is used on the container, see Stainless Steel and Glass Containers page 21. If the Level Switch is installed with ex-barriers, also include information about the ex-barrier type and how it is connected to the Level Switch and D72/DP72.

8. Level Sensor Mode

In Level Sensor mode a sensor is attached at the bottom of the container and measures the continuous liquid level. The sensor is attached outside the container and senses through the bottom (no hole is needed). A second sensor measuring sound velocity can also be attached.

Four sensors can be attached to one Ultrasound Controller, measuring the level in two containers.

Quick start guide

- Install sensors according to instructions on page 27 and instructions in Level Switch Manual.
- Connect cables, see page 7 or 9 and 27
- Switch on external power supply.
- Read about navigating the menu system, page 10
- If display show: ***SET sensor MODE***. Choose ***Press SELECT for LevelSensormode*** by scrolling with MENU button and selecting with SELECT button.
- Go to ***SETTINGS*** see page 28 and set all parameter that need to be set.
- Calibrate with liquid sensor 1 & 2: Fill container to at least 100mm and above Sensor 2. Select ***Calibrate with LIQUID***, Select ***Cal Sensor 1 & 2 (Lev & Vel)*** and Press SELECT button one second.
- Empty container (level below Sensor 2). Select ***Calibrate with AIR***, Select ***Cal Sensor 2 (Vel)*** and Press SELECT button one second.
- If sensor 3 and 4 exist, do the calibration for them also in similar way.
- Go to ***SHOW DATA*** to check calibrated values, page 29.
- Ready.

Functional Description

A Level Switch-type of sensor is attached under the container bottom. It sends ultrasound through the bottom and through the liquid, and then receives the echo bouncing off the liquid surface. The Ultrasound Controller then calculates the liquid level.

This measurement technique is dependent on sound velocity which can vary with liquid and temperature. By using a second sensor attached on the vertical wall of the container the velocity can be measured and compensate for it. It measures the velocity by measuring the echo from the opposite container wall. In addition, it also makes level switch measurement telling if there is liquid or not behind the wall and this can be used for setting limits for the level measurement, improving reliability see ***SETTINGS***.

It is important the echo is as strong as possible. Sound is attenuated by travelling through the bottom and through the liquid. Small bubbles and particles in the liquid also causes attenuation. The sensor need to be fairly horizontal (parallell to the liquid surface) in order for the echo to bounce back in the correct direction. If the liquid surface is disturbed by waves or vortex then the echo may only sometimes bounce back correctly. Unmixed liquids having different sound velocities can cause refraction of the sound so it bends and do not bounce back to the sensor. The strength of the echo can be checked in ***SHOW DATA***.

When the container is empty it is difficult to measure the level as there is no echo. Also levels below 20mm are difficult to measure since the echo is close to echoes within the bottom. A special measurement technique (Wall-Reverberation measurement technique WR) is used for measuring empty container. It measures how much echoes bouncing within the bottom is dampened by the liquid.

Level Switch KSF should be used as sensor for level and Level Switch KS for velocity. Level Switch RS cannot be used and Level Switch LS is not recommended.

Connecting the level sensor

The Level Sensor cable may not be extended. Maximum cable length, see Level Switch manual. The unshielded part of the cable should be no longer than 40mm. The shield shall if possible be connected to ground via shielded cable glands. To minimize the risk of electric interference and noise, especially in ex-installation, see Electric Noise page 11.

Connect terminal 16 on the D72, DP72, G72 or terminal 19 on D128, G128 to ground, near the transmitter.

Ultrasound Controller Terminal		Cable	GF90
D72 / DP72	D128		
8	11	Sensor 1 (level) Brown	1 Brown
9	12	Sensor 1 White	1 White
10	13	Sensor 2 (velocity) Brown	1 Green
11	14	Sensor 1 Shield and Sensor 2 Shield	Shield
12	15	Sensor 2 White	1 Yellow
13	16	Sensor 3 (level) Brown	2 Brown
14	17	Sensor 3 White	1 White
15	18	Sensor 4 (velocity) Brown	2 Green
16	19	Sensor 3 Shield and Sensor 4 Shield and Ground	Shield and Ground
17	20	Sensor 4 White	2 Yellow

Mounting the Sensor for level and velocity

Sensor1 or sensor3 which is measuring the level is mounted under the bottom of the container. The ultrasound travels through the bottom and it is important the sound can pass easily through the bottom into the liquid. It depends on the wall material and thickness. Steel or glass bottom 1,2mm - 7 mm are ok. Most plastics let sound trough well except polypropylene and fiber reinforced plastics. For stainless steel, best result is achieved with bottom thickness being a multiple of 1,42mm (resonance at 2MHz half wavelength). Stainless steel bottom thickness 7mm 5,7mm 4,3mm 2,8mm or 1,4mm works well at 2MHz which is the ideal frequency for the Level Switch. For other thicknesses other less ideal frequencies will be chosen by the Ultrasound Controller. The thickness of the bottom also determines how well low levels can be measured. When the bottom is thick, vibrations within the wall decays slowly and measurements of low levels becomes more difficult. Minimum level that can be measured depends on the bottom thickness and material.

The ultrasound beam is narrow (beam angle about 10˚) so the level sensor must be aimed in such a way that the echo from the surface is properly returned back to the level sensor. If the bottom is not horizontal, silicone can be used to glue the Level Switch at an angle, see below.

See Level Switch manual how to glue the sensor. The GF90 contain both level and velocity sensors. Sound velocity varies with liquid and temperatures. A Level Switch used as a sensor for velocity is placed low on the container wall. It measures and compensates for sound velocity changes. It also makes level switch measurement which can be used to limit the measured level for extra reliability.

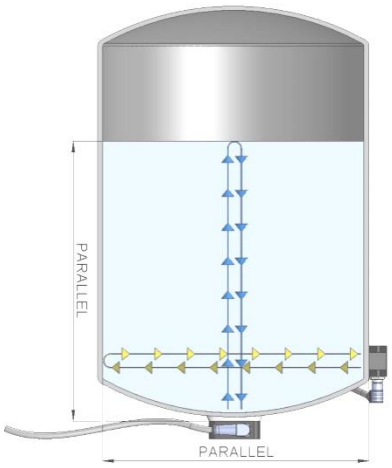

Mounting the sensor for velocity

A Level Switch-type of sensor is used as a the sensor for velocity to measure the sound velocity of the liquid. It should be mounted on the container wall to measure the echo from the opposite container wall. If possible near the bottom but nothing should obstruct the echo. How well the sound passes through the wall depend on the material and thickness, see above. This sensor also detects if there is liquid or air at its level.

Installing the sensor on a non-horizontal bottom

If the bottom is not horizontal or has uneven thickness, a thick layer of silicone can be used to glue the sensor in a more horizontal position. In this case the sensor should be connected to Ultrasound Controller and be active measuring before it is being glued so that the position can be adjusted for the strongest echo. Fill the container half or more and attach the sensor with silicone between sensor and bottom. Calibrate with liquid and go to ***Measured Level Sensor***. The echo strength is shown in ***dB***. Small adjustments can be made of the angle of the sensor and the thickness of the silicone in order to achieve maximum echo strength. Find the best position and calibrate with liquid again and check position again for maximum echo strength. Then keep the level sensor fixed until the silicone cures.

Container top

When the container is full of liquid all the way up to the top the ultrasound will bounce off the top instead of off the liquid surface. Ideally the top should be parallell with the sensor and rather not conical. If it must be conical, a small angle is prefferred or a small non-conical part of the radius above the sensor.

Level Sensor start-screen

When power is applied, the Level Sensor start-screen is displayed showing `LevlSens` on first line to the right signifying this is Level Sensor start-screen. On the second line to the right is written `1234` which shows the state of each of the four relays. A light digit on dark background signifies a closed relay.

To the left, the digit 12 signifies sensor 1 (level) + sensor 2 (velocity), followed by the measured level in %. If no measurement can be done there is text with error information instead. On the second line, the digit 34 signifies sensor 3 (level) + sensor 4 (velocity). The digit background changes to dark when liquid is sensed by the sensor for velocity.

`cal`	calibration needs to be done of air or liquid
`set`	parameters remain to be set
`---`	not active
`> 100%`	level is over 100%
`err1`	error1 – see troubleshooting
`err2`	error2 – see troubleshooting
`err3`	error3 – see troubleshooting

Example: Sensor 1 + 2 show 30% level
Sensor 3 + 4 need to be calibrated

```
12  30%     Level
34  cal       1234
```

SETTINGS

Through the ***SETTINGS***-menu the parameters can be set.

Select ***SET Range*** to set the level change in mm which correspond to 100% level change. (Measurement is done up to 170% of this level)

Select ***SET Offset*** to set an offset which is added to the measured level before it is converted to percent and sent to mA outputs. Offset is not added to the measured level in mm.

Select ***SET Sensor WR threshold*** to set the threshold (in dB) for very low level echo to be detected using WR-technique. Higher value makes it less sensitive. A smaller value makes it more sensitive but with higher risk of wrongly detecting low level when there is high level.

Select ***SET Liquid Sound Velocity*** This parameter is used if there is no sensor for velocity. It should be set to the correct velocity for the liquid.

Select ***SET Sensor InnerDISTANCE*** to set the inner diameter (in mm). If no sensor for velocity exist this parameter should be set to ***[not set]***.

Select ***SET Sensor HEIGHT*** to set the height (in mm) above the bottom where the sensor for velocity is attached. If this value is set, the level measurements of the velocity sensor can be used to set limits for the level measurement.

Select ***SET Sensor Control*** to set how the air/liquid measurements of the sensor for velocity is used. Set it to ***Level unaffected*** if it should not be used. Set it to ***Limit level*** if it should limit the level measurements. This can improve reliability.

Select ***SET Sensor Bottom-Thickness*** This is used to compensate for sound travelling time through the bottom of the container.

Select ***SET Sensor Wall-Thickness*** This is used to compensate for sound travelling time through the wall.

Select ***SET Sensor1/3 FREQUENCY*** This is the frequency used for the level sensor. Usually Auto is good choice or manually try different frequency depending on container bottom thickness.

Select ***SET Sensor2/4 FREQUENCY*** This is the frequency used for the velocity sensor. Usually Auto is good choice or manually try different frequency depending on container wall thickness.

Select ***SET RELAY*** to set how the relays should act. Each relay have one normally open contact (at power off the relay is open).

Fixed settings for GF90: ***Sensor WR threshold:*** *disabled*, ***InnerDISTANCE:*** *90mm*, ***Sensor HEIGHT:*** *not set*, ***Sensor Control:*** *level unaffected*, ***Sensor Bottom-Thickness:*** *GF90*, ***Sensor Wall-Thickness:*** *GF90*, ***Sensor1/3 FREQUENCY:*** *2,0MHz*, ***Sensor2/4 FREQUENCY:*** *2,2MHz*

CALIBRATION

Select ***CALIBRATION*** to calibrate. Calibration must be done after installation. Calibration should be done for liquid with minimum 100mm liquid level and minimum above the sensor for velocity. Do not fill completely if the container top is conical and do not reflect the echo so well. During calibration Ultrasound Controller tries different frequencies and selects the one with the strongest echo. Calibration should also be done for Air if there is a sensor for velocity (then liquid level must be below the sensor for velocity). Air calibration is only necessary if a sensor for velocity is used. If possible calibrate with a similar type of liquid as what is going to be used later.

If there is a velocity sensor the calibration measures the sound velocity and this measurement will be used when the liquid level is below the velocity sensor.

It is important to check (in ***SHOW DATA***) that the calibration value of the echo is higher than 20dB.

A new calibration must be done if a sensor is moved or removed.

It is recommended to perform a new calibration every year to compensate for possible slow changes.

SHOW DATA

Select ***Measured Level Sensor*****:** to show measured ***level mm***, echo strength ***dB***, the amount of background noise ***dBnoise***, ***dBWR*** which is the strength of very low level echo. Check that the value of echo strength ***dB*** is high and ***dB noise*** is low.

Select ***Calibrated Level Sensor*****:** to show calibrated echo strength ***dB*** and calibrated selected frequency ***MHz***.

Select ***Measured velo Sensor*** to show echo strength ***%*** of calibrated strength with liquid and ***dB*** and used velocity ***m/s*** and weather there is ***AIR*** or ***LIQ*** behind sensor 2.

Select ***Calibrated Velo Sensor*** to show calibrated velocity ***m/s***, calibrated echo strength ***dB***, calibrated frequency ***MHz*** and calibrated threshold for detecting liquid ***%***.

Select ***Low level WR-measurements*** to show data from low level measurements (for troubleshooting use only)

ADVANCED SETTINGS

Select ***Set sensor MODE*** to set either ***Air Sensor mode***, ***Level Switch mode***, ***Level Sensor mode*** or ***Gel Sensor mode mode***. It determines which sensor can be connected.

Select ***RESTORE settings and calibrations*** to restore all settings and calibrations to factory-settings.

Select ***PROFIBUS SETTINGS*** see page 41 (for DP72).

HELP

Select ***HELP*** to show information about connecting the Ultrasound Controller.

Level Sensor TROUBLESHOOTING

Display shows:

set Some setting is missing
cal Calibration of air and/or liquid must to be done.
>100% Measured level is >100%. Consider changing ***Range.***
err1 During calibration with liquid, the echo from the level sensor is missing or very weak.
err2 During calibration, the difference in strength between echo with liquid and with air is too small.
err3 During calibration, the echo with liquid from the velocity sensor is too weak.

Container is full and the inside surface of the top of the container is shaped in such a way that echoes are reflected in wrong direction. – Make a small portion of the inside surface flat just above the level sensor.

Level sensor is aimed in wrong direction. – Aim the level sensor in the right direction.

The container is inclined and thereby the echo is bounced off in wrong direction. – Unincline the container or aim the level sensor to correct it.

The echo strength ***dB***, ***dBnoise*** and ***dBWR*** should be checked. In order for Ultrasound Controller to measure the level it needs echoes from the surface. Due to various reasons however the echoes can become too weak to be detected. Echo strength ***dB*** indicates how strong the echo is and should be compared to ***dB noise*** which is the background noise. In an empty container there is no echo. If the echo strength ***dB*** is not higher than 10dB above ***dBnoise*** there can be difficulties measuring the level. Make sure the echo is reflected properly back to the level sensor and that the Level Switch is horizontal. The bottom thickness and material also influences the echo strength, see Mounting the Level Sensor. If bottom thickness is such that resonance is not at 2MHz the echo is weaker. Bubbles or particles scatter the echo.

dBWR shows the strength of low level echoes (0-20mm) using the WR-technique. Low level echoes ***dBWR*** are compared with the ***WR threshold*** and if ***dBWR*** is above this threshold and Velocity Sensor detects low level then the WR-technique measurement takes over and forces the level to be whatever it measures. If ***WR threshold*** is lower it becomes more sensitive but risk increases of

wrong detection due to temperature changes. Empty container gives rather weak low level ***dBWR*** indication. In an empty container there is no echo from a surface and the WR-technique is then comparing the echoes within the bottom with calibrated echoes within the bottom as measured with liquid. With higher ***WR threshold*** the WR-technique becomes less sensitive and may miss detecting empty container. Set to disabled, WR-technique is disabled.

9. Gel Distance Mode

In Gel Distance mode, a Gel Distance Sensor measures the distance to the gelbed.

Ultrasound Controller G72 must be used for this mode. One sensor can be attached.

Quick start guide

- Connect the gel distance sensor cable to G72 terminal: Red to 8 white to 9 and shield to 11. Connect power supply to G72 terminal: Plus 24V to 1 and minus to 2.
- Switch on external power supply.
- Read about navigating the menu system, page 10
- If display show: ***SET sensor MODE***. Choose ***Press SELECT for GelDistance mode*** by scrolling with MENU button and selecting with SELECT button.
- Go to ***SETTINGS*** see page 33 and set the parameter that need to be set.
- Calibrate with liquid: Fill container and make sure the distance to the gelbed is > 40mm and there are no bubbles under the sensor. Select ***CALIBRATION with Liquid***, and Press SELECT button one second.

Functional Description

A Gel Distance Sensor sends ultrasound through the liquid, which then bounces back at the gelbed surface. G72 measures the echo and calculates the distance. The distance and echo strength is shown on the display.

When gelbed is expanded the gelbed surface becomes diffuse and the measured distance will be approximate. Also, the echo becomes weaker. When echo is weaker than 15dB the measurement can be unreliable. Small bubbles and particles in the liquid also causes echoes. The sensor need to be fairly horizontal (parallel to the gelbed surface) in order for the echo to bounce back properly. Unmixed liquids having different sound velocities can cause refraction of the sound so it does not bounce back to the sensor.

Measuring short distance (<20mm) can be difficult due to remaining vibrations inside the sensor. The measurement technique is dependent on sound velocity which can vary with liquid and temperature.

The mA output can be set to output distance (0% Level = 4mA, 100% Level = 20mA) or Signal strength (0dB = 4mA, 85dB = 20mA). It is adviseable to check the signal strength also during testing.

Connecting the gel distance sensor

The Gel Distance cable may not be extended. The unshielded part of the cable should be no longer than 40mm. The shield shall if possible be connected to ground via shielded cable glands. To minimize the risk of electric interference and noise, see Electric Noise page 11.

Connect terminal 16 on the G72 to ground.

G72 Terminal	Cable
8	Red
9	Blue or White
10	
11	Shield
12	
13	
14	
15	
16	Ground
17	

Gel Distance start-screen

When power is applied, the Gel Distance start-screen is displayed showing GelDist on first line to the right signifying this is Gel Distance start-screen. On the second line to the right is written 1234 which shows the state of each of the four relays. A light digit on dark background signifies a closed relay.

To the left on first line, distance is displayed in mm and on second line, echo strength in dB. If no measurement can be done there will be text with information instead.

cal	calibration needs to be done of air and/or liquid
set	parameters need to be set
---	not active
err	error – see troubleshooting

SETTINGS

Through the ***SETTINGS***-menu the parameters can be set.

Select ***SET Sensor 100% Distance*** to set the distance which correspond to 100% distance. A distance over 170% will not be measured at all.

Select ***SET Sensor 0% Distance*** to set the distance in mm under which the distance will show 0%. This is to show zero instead of an unreliable value at low levels.

Select ***SET Liquid Sound Velocity*** This should be set to the sound velocity for the liquid used.

Select ***SET RELAY*** to set how the relays should act. Each relay has one normally open contact (at power off the relay is open).

CALIBRATION

Select ***CALIBRATION*** to calibrate with liquid. Calibration must be done after installation. Fill container and make sure the distance to the gelbed is > 40mm and there are no bubbles under the sensor. Select ***CALIBRATION with Liquid***, and Press SELECT button one second.

SHOW DATA

Select ***Measured Distance*****:** to show measured distance ***mm***, echo strength ***dB*** and noise strength ***dB noise***. Check that the value of echo strength ***dB*** is high and ***dB noise*** is lower.

Select ***Calibrated Distance*****:** to show calibrated echo strength ***dB*** and calibrated selected frequency ***MHz***.

ADVANCED SETTINGS

Select ***Set sensor MODE*** to set either ***Air Sensor mode***, ***Level Switch mode***, ***Level Sensor mode***, ***Gel Sensor mode mode***, or ***Gel Distance mode***. It determines which sensor can be connected.

Select ***RESTORE settings and calibrations*** to restore all settings and calibrations to factory-settings.

HELP

Select ***HELP*** to show information about connecting the Ultrasound Controller.

Gel Distance TROUBLESHOOTING

Display shows:

set Setting is missing
cal Calibration of liquid must to be done.
err During calibration with liquid, the echo from the level sensor is missing or very weak.

For Ultrasound Controller to measure the level well it needs detectable echoes from the gel surface. Due to various reasons, the echoes can become too weak to be able to be detected. Echo strength ***dB*** shows how strong the echo is and and ***dB noise*** shows how strong the noise is. In air, there is no echo.

10. Gel Sensor Mode

Gel Sensor Mode can measure the presence and concentration of gel media, used in chromatography systems. It can measure single levels of gel and gel concentration behind the container wall. The Gel Sensor senses through the wall (no hole is needed). Four single levels can be measured with one Ultrasound Controller. Level Switch KS (or Level Switch QS containing four sensors) can be used as gel sensors.

GF90 is a gel sensor to be installed inside the column.

Quick start guide

- Install Gel Sensors (Level Switches) according to instructions in the Level Switch Manual.
- Connect cables, see Connecting the Gel Sensor.
- Switch on external power supply. You may have to press POWER to activate D128.
- You may read about navigating the menu system, page 10
- If display show: ***SET sensor MODE***. Choose ***Press SELECT for Gel Sensor mode*** by scrolling with MENU button and selecting with SELECT button.
- Go to ***SETTINGS*** see page 38 and set all parameter that need to be set.
- Calibrate Gel Sensors with liquid. Make sure liquid level is above and gel level is below the Gel Sensors. Select ***Calibrate Liquid 1- 4 together*** and press SELECT button one second.
- Go to ***SHOW DATA*** to check values, page 39
- Ready to use.

Connecting the Gel Sensor

Either Level Switch KS or Level Switch QS can be used as Gel Sensor and can be connected to D72, DP72 or D128. GF90 however can only be connected to G128 (because it uses 4MHz).

The Level Switch cable may not be extended. Maximum cable length, see Level Switch manual. The unshielded part of the cable should be no longer than 40mm. The shield shall if possible be connected to ground via shielded cable glands. To minimize the risk of electric interference and noise, especially in ex-installation, see Electric Noise page 11.

Ultrasound Controller		Cable color	Cable color
D72 DP72	**D128**	**Level Switch KS**	**Level Switch QS**
8	11	Sensor **1** Brown	Black (Brown)
9	12	Sensor **1** White	Grey
10	13	Sensor **2** Brown	Blue (White)
11	14	Cable shield	Cable shield
12	15	Sensor **2** White	
13	16	Sensor **3** Brown	White (Blue)
14	17	Sensor **3** White	Grey (jumper)
15	18	Sensor **4** Brown	Brown (Black)
16	19	Cable shield and Ground	Cable shield & Ground
17	20	Sensor **4** White	

Connect terminal 16 on the D72, DP72 or terminal 19 on D128 to ground, near the transmitter.

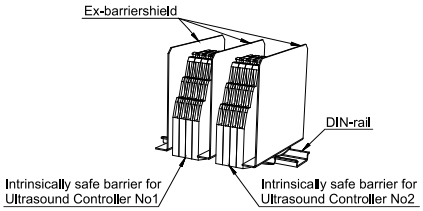

The cable from the Gel Sensor should connect directly to the Ultrasound Controller. The cable shield must always be connected to Ultrasound Controller (and shielded cable must always be used). Any unshielded part of the cable should be no longer than 40mm. To minimize the risk of electric interference it is important that sources of interference like frequency inverters should use shielded cables between inverter and motor.

Ultrasound Controller		Cable color
	G128	**GF90**
	11	Sensor **1** Yellow
	12	Sensor **1** Green
	13	Sensor **2** Yellow
	14	Cable shield & Brown & White
	15	Sensor **2** Green
	16	Sensor **3** Yellow
	17	Sensor **3** Green
	18	Sensor **4** Yellow
	19	Cable shield & Brown & White & Ground
	20	Sensor **4** Green

Measuring Gel

Gel media used in chromatography systems consists of small particles which scatters the ultrasound causing attenuation. Ultrasound attenuation is a reliable method to measure gel concentration. Ultrasound attenuation per meter is fairly proportional to gel concentration. The amount depends on ultrasound frequency and gel type.

During calibration the relative echo signal strength, ***Relativ Signal***, is adjusted to 100% and relative attenuation, ***RelativAtt***, is adjusted to 0dB/m, then gelconcentration, ***Gelconc***, becomes 0%. Normally calibration is done with pure liquid without gel. When gel concentration increases, attenuation increases and the echo signal strength drops.

Unfortunately, not only gel causes attenuation, unsolved dense matter also causes attenuation. ***GEL-THRESHOLD*** should therefore be set so that wrong detection of gel is avoided or calibration should be done with the liquid containing unsolved dense matter. Look at ***Gelconc %***, when different liquids exist in the container and see what happens. ***Gelconc %*** and ***RelativAtt*** can not become negative so attenuation lower than the calibrated attenuation can only be seen in as ***Relativ Signal*** being higher than 100%.

Liquids that have different sound velocities and not being well mixed, causes refraction and thereby attenuation. This happens for example if a liquid is switched from one kind to another like water switched to alcohol.

Low liquid level (Air) causes high attenuation and cannot be distinguished from gel. However by simultaneously measuring air/liquid with the WR-technique, wrong detection of gel when there is air can be avoided.

In ***SHOW DATA*** measurement data can be checked.

Measurement technique

Gel is measured by measuring sound attenuation using echo-technique. Air or liquid can also be measured using the Liquid sensor WR technique.

The echo-technique measures echo from a reflecting surface inside the container, usually the opposite container wall or the pin on GF90. Sound pulses are transmitted and comes back as echoes after bouncing off the reflecting surface.

The signal strength is measured and relative attenuation is calculated by subtracting the calibrated signal strength. The relative attenuation is divided by the measuring distance (twice the distance to the reflecting surface). The result is relative attenuation measured in dB/m and it is fairly proportionat to gel concentration. It can be converted into gel concentration by dividing with the attenuation of 1% gel. The setting of ***GEL-TYPE*** sets the amount of attenuation corresponding to a gel concentration in %. This value is dependent on type of gel and measuring frequency.

To find out the amount of gel-attenuation of your gel, you can measure it by making a known concentration of your gel and measure the relative attenuation while stirring so the gel doesn't fall to bottom. Then adjust ***GEL-TYPE*** until correct value is displayed.

It is important the ultrasound can pass as easy as possible through the container wall. How well it passes depend on the wall material and thickness and how the Level Switch is attached. Steel or glass wall should be in the range 1,3mm - 15 mm and plastic wall <30mm (PP<10mm). Testing on the actual container is recommended. Any welding-joint in the wall should be avoided as it can refract the sound-beam.

The ultrasound beam behaves similar to a light-beam, the direction of the echo depend on from what angle it hits the reflecting surface. The sound beam is approximately 1cm in diameter. Obstructing objects in the path between sensor and the reflecting surface may cause the beam to divert. It is possible to use objects other than the opposite container wall as a reflecting surface.

On small containers (less than 60mm, depending on wall material), sound travelling along the container wall can cause problem, when measuring high attenuation.

The Liq WR sensor measurement is done independent of the gel-measurement. It can detect the presence of air which would otherwise give a false indication of gel. The Liq WR sensor measures vibrations in the container wall (sensor wall in GF90) to determine if there is air or not behind the wall. The Liq WR sensor transmits sound and then measures how quickly vibrations in the container wall disappear. Vibrations in the wall disappear more slowly with air. The Liq WR sensor is dependent on the material and thickness of the wall. Only plastic wall < 30mm (PP<10mm) works well. Liq WR sensor may have temperature dependence and should be avoided on glass wall if temperature varies more than +-5ºC during measurements and should not be used on steel wall. The Liq WR sensor measures small signal changes and is sensitive to small movements of the Level Switch, therefore gluing is preferred when Liq WR measurement is used.

Mounting the Level Switch

How to mount the Level Switch on the container is described in Level Switch manual.

Gel Sensor start-screen

When power is applied, the Gel Sensor start-screen is displayed showing GelSen on first line to the right signifying this is Gel Sensor start-screen. On the second line to the right is written 1234 which shows the state of each of the four relays. A light digit on dark signifies a closed relay.

To the left are four small digits signifying Gel Sensor 1 2 3 and 4 with three-letter-text following each digit showing information about each Gel Sensor:

GEL	gel is detected
LIQ	no gel is detected
AIR	air is detected
	Gel Sensor is not existing
cal	Waiting for calibration of Air and/or Liquid
set	parameters need to be set
--	Gel Sensor is disconnected
err	error – see troubleshooting

Example: Gel Sensor 1 detecting GEL, Gel Sensor 2 connected but all parameters are not set, Gel Sensor 3 need to be calibrated, Gel Sensor 4 is disconnected, Relay1 closed.

```
1 GEL  3 cal   GelSen
2 set  4 --     1234
```

SETTINGS

Through the ***SETTINGS***-menu the parameters of the Gel Sensor can be set.

Select ***SET Type*** to set it according to how many sensors are connected, or set to ***Level Switch QS***. For GF90 set it to ***GS1*** if one is connected and ***GS1,GS2*** if two are connected and so on.

Select ***SET ECHO-DISTANCE*** to set the distance between the Level Switch and opposite reflecting surface inside the container. For GF90 set it to *90mm*.

Select ***SET GEL-TYPE*** to set the the amount of attenuation of the gel (depend on gel type and frequency) For Streamline SP gel set to: *7dB/m at 2MHz,14dB/m at 4MHz* for tungsten gel set to: *40dB/m at 2MHz,80dB/m at 4MHz*.

Select ***SET GEL-THRESHOLD*** to set the gel concentration to be detected. Gel-threshold is independent of ***ECHO-DISTANCE***. Depending also on ***ECHO-DISTANCE*** and ***GEL-TYPE*** coprrespond to an attenuation. Be careful with high setting of ***GEL-THRESHOLD*** at long ***ECHO-DISTANCE*** since high attenuation can be difficult to measure.

Select ***SET FREQUENCY*** to set the measurement frequency. Calibration for different frequencies are stored during calibration. ***FREQUENCY*** can be changed after calibration. If container is made of glass or stainless steel, try different frequencies to find one with strongest echo. (The wall thickness determines how well different frequencies can pass the wall). For GF90 set it to *4MHz*.

Select ***Liquid Sensor SET WR THRESHOLD*** to set threshold of the Liq WR sensor. A good setting is half the value of ***Liq WR sensor dB*** with Air (see SHOW DATA). It works best on plastic wall or GF90. For GF90 it can be set to *7dB*. If not used set it to disabled.

Select ***SET RELAY*** to set how the relays act. Each relay has one contact (at power off the relay is open). There are four relays. Relay can be set to be closed or open with detection of gel. If Liq WR sensor is used and detecting air, this prevents indicating gel. Relay can also be set to be closed with air, with no sensor or with error.

Select ***SET mA output A*** or ***SET mA output B*** to set the 4-20mA outputs. ***1,5mA/GelDetectn*** means each gel sensor that detects gel adds 1,5mA to the output. ***Relative attenu. 1mA=-4dB/m*** means output is 1mA for each 4dB/m of attenuation. ***Gelconcentration 1mA=1%*** means output is proportional to gelconcentration: 0% = 4mA, 16% = 20mA. If Liq WR sensor is used and it detects air, gelconcentration will be zero.

CALIBRATION

Make sure there is liquid and no gel behind the Level Switches. Select ***CALIBRATION*** and select ***1-4 together*** (or select a single sensor) then hold SELECT button pressed one second to calibrate the Gel Sensors.

The sensors must be calibrated after installation. If the KS or QS sensors have been moved it is recommended to calibrate again. Changing the ***ECHO-DISTANCE*** also require new calibration.

To see how well the Gel Sensor behaves with different liquids the relative echo signal can be checked in ***SHOW DATA***. Look at the values in ***Relativ Signal %*** and ***Gelconc.*** Check how different liquids affect the echo signal.

If Liquid Sensor WR is not disabled check also ***Liq WR sensor dB.*** This is the signal from the Liquid Sensor WR which is set to zero during calibration. With air in the container check the value of ***Liq WR sensor dB***. The ***Liquid Sensor WR THRESHOLD*** should be set to half of this value.

Check ***Signal Strength***. With liquid and no gel it should be minimum 35dB. The reason for a low signal strength can be a tiny air-gap between the Level Switch and the container, wrong angled Level Switch, wrong settings, liquid that attenuates the sound, glass or steel wall with thickness that do not let through the selected frequency very well (try a different frequency).

SHOW DATA

Select ***Measured data*** to show measured data. All four Gel Sensors are shown together. Pressing MENU button scrolls through: ***Gelconc. %***, ***Relativ Signal %***, ***RelativAtt. dB/m***, ***Signal dB*** and ***Liq WR sensor dB***.

Gelconc. %, is the measured gel concentration.

Reltiv Signal %, is measured echo signal strength in percent of calibrated echo signal strength.

RelativAtt. dB/m, is the measured sound attenuation per meter. It is set to zero at calibration and it is independent of echo-distance.

Signal dB is the measured echo signal strength (dB) where 85dB is maximum and 0dB is minimum. When signal is below 20dB, then echo is so weak that there is risk that the measured gel-concentration is lower than actual gel-concentration.

Liq WR sensor dB is the signal from the WR-measurement (determining if there is liquid or air) and it is shown relative to signal strength at calibration (dB). It is adjusted to 0dB with liquid during calibration and depending on the container wall around 3dB with air. Check this with liquid and with air to determine the value for ***WR THRESHOLD***.

Select ***Calibrated Data*** to show calibrated data. All four Gel Sensors are shown together. Pressing MENU button scrolls through: ***Cal Liq dB***, ***Freq*** and ***Test Sensor dB***

Cal Liq dB is the measured echo signal strength during calibration with liquid (dB). The higher the better. Lower than 35dB is considered to be too weak signal.

Freq is the chosen frequency: 1=1,3MHz, 2=1,5MHz, 3=1,7MHz, 4=2MHz, 5=2,2MHz or 6=4MHz. Use as high as possible (except only GF90 uses 4MHz). Steel or glass wall thickness may make it necessary to change to a lower frequency in order to get high echo strength.

Test Sensor dB shows Liquid Sensor WR signal. It can be used to test a Gel Sensor not attached to a container. If the Gel Sensor is correctly connected a value between 0 and 30 should be shown. Pressing on the inner side of the Gel Sensor with a thumb the value increases showing the Level Switch is working. A bad Level Switch, wrong or not connected will show a value 60 or more.

ADVANCED SETTINGS

Select ***Set sensor MODE*** to set either ***Air Sensor mode***, ***Level Switch mode***, ***Level Sensor mode*** or ***Gel Sensor mode mode***. It determines which sensor can be connected.

Select ***RESTORE settings and calibrations*** to restore all settings and calibrations to factory-settings.

Select ***PROFIBUS SETTINGS*** see page 41 (for DP72).

HELP

Select ***HELP*** to show information about connecting the Ultrasound Controller.

Measurement Reliability

Many factors determine the reliability (wall material, wall thickness, liquid properties, temperature and glue). Therefore, it is always advisable to make tests under varying conditions and temperatures.

The reliability of Liquid Sensor WR depend on the container wall. On a plastic wall 10-30mm it works well. On GF90 it works well. On a glass wall and polypropylene wall there can be temperature dependence and should not be used if there is more than +- 7°C variation during measurement. On steel wall it is not recommended.

Gel Sensor TROUBLESHOOTING

Display shows:

-- The Gel Sensor is not connected or there is a short circuit.

cal Calibration has not been done. Calibration must be done with Liquid.

set Some settings are missing. If the relay does not change but the display changes between Liquid, Air and Gel then setting of ***RELAY*** is wrong.

err During calibration the echo signal was weak: The reason can be: Calibration was done without liquid or with gel. Or the Level Switch is not attached correctly to the container. There is a tiny air-gap between the Level Switch and the container. Or ***DISTANCE to reflecting wall*** is set wrong. Or the echo is reflected in a direction where it does not reach the Level Switch. Or something obstructing lies between the Level Switch and the reflecting wall. Or the container wall does not let through enough sound. Try a different ***FREQUENCY***. Or wrong connection or faulty Level Switch. Select ***Test Gel Sensor*** then test the Level Switch and its connection.

Electric interference can show itself as the attenuation and gel concentration not being able to get high enough with gel. To minimize the risk of interference it is important that sources of interference (like frequency inverters) should use shielded cables between inverter and motor. Also any unshielded part of the cable between the Level Switch and Ultrasound Controller should be short. If ex-barriers are used, Ex-barriershields must be used especially if there is more than one Ultrasound Controller.

11. Profibus DP

Connecting Profibus

The Ultrasound Controller DP72, GP72 supports Profibus DP-V0 with communication speeds up to 1,5Mbit/s. The Profibus cable connects to DP72, GP72 via a 9-pin D-sub connector see table.

To terminate the Profibus cable, put 390Ω between pin6 and pin8 and 220Ω between pin6 and pin5 and 390Ω between pin3 and pin5.

The Profibus-interface in DP72, GP72 is not isolated from power supply.

The gsd-file: DP720B0E.gsd is needed for configuration of the Profibus master. It can be downloaded at www.aqmtech.se. The version of the gsd-file is written in the beginning of the gsd-file (the gsd-file can be viewed with a text editor). It must be the correct version. See page 3 for correct version.

PROFIBUS Parameters

The ***PROFIBUS SETTING*** menu: (accessible through ***ADVANCED SETTINGS*** menu)

Select ***BITRATE***: to set the bitrate. Auto automatically selects bitrate. (Maximum bitrate is 1,5Mbit/s).

Select ***ADDRESS***: to set the address (0-125). Every unit must have different address.

Select ***PARAMETER ACCESS***. If set to ***Profibus only*** then all parameters, (except PROFIBUS Parameters) will be set by the Profibus master only. If set to ***Menu only***, then all parameters can be set via the menu and not via Profibus master.

Select ***CONTROL***: to ***Enabled*** or ***Disabled*** Profibus communication.

Profibus Status-symbol

The status of the Profibus communication is shown as a Profibus status-symbol on the start screen at the bottom right corner of the display:

□	Profibus enabled but no communication is detected.
	(nothing) Profibus is not enabled.
■	Communication is detected.
T	Correct profibus telegrams detected.
P	Parameter or configuration telegram received.
> <	(alternating) Data exchange. (Data is received and responded)
X	Ready for data exchange but no data telegram is being received.

Request Data

In data exchange state the master regularly sends one byte request data and DP72 responds with 16 bytes response data (1-16).

Request data should be normally zero. The master can start calibration of one or more sensors by sending request data with calibration command (the request data bits 1-4 are set according to which sensors are to be calibrated and bit0 is set if liquid is to be calibrated, see the Profibus data exchange table below). After the master has sent this request data with calibration command, request data should be cleared to zero again. DP72 starts the calibration exactly when request data bit 1-4 changes from being all zero to being non-zero. Calibration can also be done through

the menu system of DP72. Calibration takes about 1-5 seconds and during this time DP72 will not accept any new calibration commands (calibration in progress is shown in response data 1 bit7).

Response Data

Most of the Response data is the same data as shown in SHOW DATA menu and the start screen. The format is 8 bit unsigned and in some cases 16 bit unsigned. Chapter SHOW DATA gives more information about the data.

Air Sensor: Response data 1 and 2 bit 0 shows the Filtered Air/Liquid-data for the selected sensitivity. Filtered Air/Liquid-data for all sensitivities are available in Response data 3 and 4 and can be used to show different bubble sizes or change sensitivity without changing any settings**.** The indication of Air is always minimum 0,5s even if a bubble passes quickly through the Air Sensor.

Level Sensor: For ***Measured Level*** %, the value 255 corresponds to 100%. For ***Measured Level*** mm the format is 16 bit unsigned data: high byte and low byte

Request Data table

Request Data	Air Sensor Mode	Level Switch Mode	Level Sensor Mode
1	bit0: 0= Air 1= Liquid bit1: 1= calibrate AS 1 bit2: 1= calibrate AS 2 bit3: 0 bit4: 0 bit5: 0 bit6: 0 bit7: 0	bit0: 0= Air 1= Liquid bit1: 1= calibrate LS 1 bit2: 1= calibrate LS 2 bit3: 1= calibrate LS 3 bit4: 1= calibrate LS 4 bit5: 0 bit6: 0 bit7: 0	bit0: 0= Air 1= Liquid bit1: 1= calibrate Level 1 bit2: 1= calibrate Level 2 bit3: 0 bit4: 0 bit5: 0 bit6: 0 bit7: 0

TROUBLESHOOTING

The Profibus status-symbol on the start screen at the bottom right corner of the display gives information for troubleshooting.

When Profibus is working correctly, Profibus status-symbol should show alternating > < indicating data communication.

If the Profibus status-symbol shows □ it means DP72 do not detect any communication. The reason can be Profibus-cable is not connected or Profibus Master is inactive.

If the Profibus status-symbol shows ▮ it means DP72 detects communication but it is not correct Profibus telegrams. Bitrate or cable polarity could be wrong.

If the Profibus status-symbol shows T it means DP72 detects correct Profibus-telegram but nothing is addressed to DP72. The reason can be wrong address or wrong master settings.

If the Profibus status-symbol shows P it means the Profibus master is sending parameter telegrams. If P is shown repeatedly it means Profibus master is repeatedly sending parameter telegrams but DP72 do not accept them. Something is wrong with the parameter telegrams. The reason can be the master in configured with wrong gsd-file or old gsd-file version.

If no Profibus status-symbol is shown at all it means Profibus is not enabled.

Response Data	Air Sensor Mode	Level Switch Mode	Level Sensor Mode
1	**Air Sensor 1** bit0: 0= Air 1= Liquid bit1: not used bit2: 1= settings error bit3: 1= no sensor bit4: 1= calibration not been done bit5: 1= error bit6: 1= error very low sensitivity bit7: 1= calibration in progress	**Level Switch 1** bit0: 0= Air 1= Liquid bit1: *Efrq* or *Wfrq* bit0[2] bit2: *Efrq* or *Wfrq* bit1[2] bit3: *Efrq* or *Wfrq* bit2[2] bit4: 1= no sensor bit5: 1= error bit6: not used bit7: 1= calibration in	**Level Sensor 1** bit0: velocity sensor 2: 0=Air 1=Liq bit1: 1= no sensor 1 or 2 bit2: 1= calibration missing bit3: 1= error bit4: 1= no echo bit5: 1= OVER (>100%) bit6: -
2	**Air Sensor 2** (same as above)	**Level Switch 2** (same as above)	**Level Sensor 3** (same as above)
3	**Air Sensor 1** 0=Air 1=Liquid bit0: Very Very low bit1: Very low sensitivity bit2: Low sensitivity bit3: Medium sensitivity bit4: High sensitivity bit5-7 not used	**Level Switch 3** (same as above)	**Level Sensor 1** *Measured Level* % (255=100%)
4	**Air Sensor 2** (same as above)	**Level Switch 4** (same as above)	**Level Sensor 3** *Measured Level* %
5	Air Sensor 1a *Ndata* % or *VLdata*[1]	**Level Switch 1** *Edata* % or *Wdata*[2]	**Level Sensor 1** *Measured Level* mm High
6	Air Sensor 1b *Ndata* % or *VLdata*[1]	**Level Switch 2** *Edata* % or *Wdata*[2]	**Level Sensor 1** *Measured Level* mm Low
7	Air Sensor 2a *Ndata* % or *VLdata*[1]	**Level Switch 3** *Edata* % or *Wdata*[2]	**Level Sensor 3** *Measured Level* mm High
8	Air Sensor 2b *Ndata* % or *VLdata*[1]	**Level Switch 4** *Edata* % or *Wdata*[2]	**Level Sensor 3** *Measured Level* mm Low
9	Air Sensor 1a *NLiq*	**Level Switch 1** *ELiq* or *Wss*[2]	**Sensor 2** *Sound velocity* m/s High
10	Air Sensor 1b *NLiq*	**Level Switch 2** *ELiq* or *Wss*[2]	**Sensor 2** *Sound velocity* m/s Low
11	Air Sensor 2a *NLiq*	**Level Switch 3** *ELiq* or *Wss*[2]	**Sensor 4** *Sound velocity* m/s High
12	Air Sensor 2b *NLiq*	**Level Switch 4** *ELiq* or *Wss*[2]	**Sensor 4** *Sound velocity* m/s Low
13	Air Sensor 1a *NAir* % or *VLthld*[1]	**Level Switch 1** *Ethd* % or *Wthd*[2]	**Level Sensor 1** *dBWR*
14	Air Sensor 1b *NAir* % or *VLthld*[1]	**Level Switch 2** *Ethd* % or *Wthd*[2]	**Level Sensor 3** *dBWR*
15	Air Sensor 2a *NAir* % or *VLthld*[1]	**Level Switch 3** *Ethd* % or *Wthd*[2]	**Level Sensor 1** *Echo strength* dB
16	Air Sensor 2b *NAir* % or *VLthld*[1]	**Level Switch 4** *Ethd* % or *Wthd*[2]	**Level Sensor 3** *Echo strength* dB

[1] depend on sensitivity (Normal or Very Low)
Ndata = Normal measurement data
Efrq = Echo frequency
VLdata = Very Low sensitivity measurement data
NLiq = Normal sensitivity calibrated liquid data dB
NAir = Normal sensitivity calibrated air data
VLthld = Very Low sensitivity calibrated threshold
Ethd = Echo threshold

[2] depend on Technique (Echo or WR)
Wthd = WR threshold
Wfrq = WR frequency
Edata = Echo measurement data
Wdata = WR measurement data
ELiq = Echo calibrated liquid data * 0,3dB
Wss = WR signal * 0,7dB

12. Technical specifications Ultrasound Controller

Hardware version	See page 3
Software version	See page 3
Weight	210g (D72,DP72,G72), 370g (D128, G128)
Operating temperature	0°C to 50°C
Supply voltage	24V ± 3V DC
Current consumption max	200mA
Relay 1-4	potential free contacts (open when power is off) Maximum load: 30V DC/AC 500mA All four relays are connected to a single common (terminal 3)
mA output	4-20mA (active output) maximum voltage drop on connected load 10V
Protection class	IP30 (D72,DP72,G72) IP65 (D128,G128)
Ambient Humidity	0% - 90%
Material	Aluminum, PA, PC, POM
Measurement frequency	1,1 – 2,2 MHz
Average output power	10 mW
Profibus DP	In DP72 only
Gsd file for DP72	DP720B0E.gsd version see page 3
Cable glands in D128	M12: cable Ø3,5mm - Ø7mm M16: cable Ø4,1mm - Ø10mm

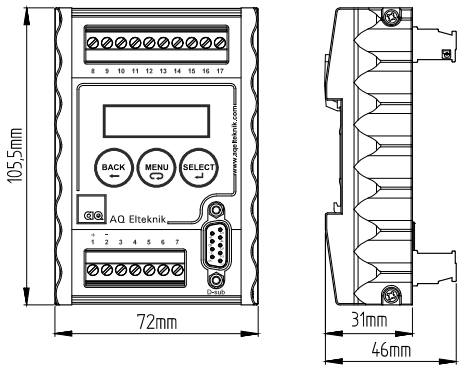

D72,DP72,G72

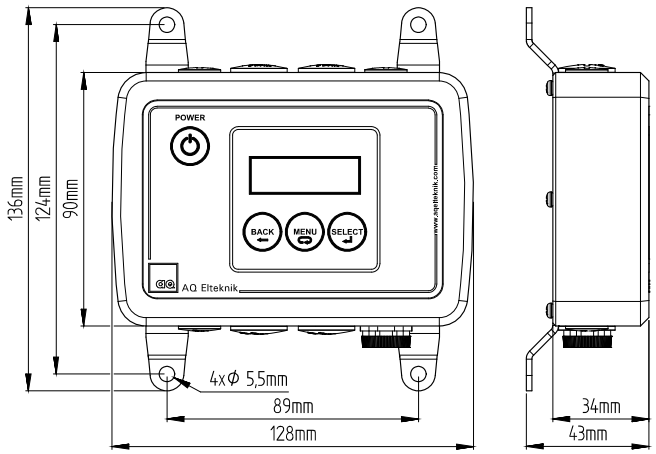

D128

13. Parameter settings

Air Sensor Mode		
TYPE	**DIAMETER**	**FILTER**
No Air Sensor	No Air Sensor	integrate 1ms
SAC or CCS	2 mm	integrate 3ms
SAC Ex or CCS Ex	3 mm	integrate 10ms
FCS	4 mm	integrate 30ms
PAC or FCP	4,5 mm	integrate 0,1s
FCS Ex	5,7 – 6,3 mm	integrate 0,3s
DAP	6,4 – 7,4 mm	integrate 1s
	7,4 – 8,4 mm	integrate 3s
SENSITIVITY	8,4 – 9,5 mm	delay 0,3s
very very low	9,5 – 10,5 mm	delay 1s
very low	10,6 – 11,8 mm	delay 3s
Low	11,9 – 13,1mm	delay 10s
medium	13,2 – 14,9 mm	
High	15,0 – 16,9 mm	**RELAY**
	17,0 – 18,9 mm	Open AS1 Liq,Close AS1 Air
mA output	19,0 – 21,0 mm	Open AS1 Air,Close AS1 Liq
disabled	21,0 – 23,8 mm	Open AS2 Liq, Close AS2 Air
Normal Measurement Data	23,9 – 27,8 mm	Open AS2 Air,Close AS2 Liq
All Sensitivities	27,9 – 32,3 mm	
	32,4 – 36,5mm	
	36,5 – 39,8 mm	
	39,9 – 43,8 mm	
	43,9 – 48,5 mm	
	48,5 – 53,1 mm	
	53,2 – 57,6 mm	
	57,7 – 62 mm	
	62 – 67 mm	
	67 – 75 mm	

Level Switch Mode		
Type AND Technique	**ECHO-DISTANCE**	**Jacket**
No Level Switch	34mm	no Jacket
Type: KS,MK,MS,LS Technique: ECHO	38mm	... mm
Type: RS Technique:WR	42mm	
Type: KS,MK,LS Technique: WR	46mm	**FREQUENCY**
	49mm	1,3MHz
FILTER	53mm	1,5MHz
0,5s	58mm	1,7MHz
1s	65mm	2,0MHz
2s	75mm	2,2MHz
4s	85mm	Auto
8s	100mm	
12s	115mm	**Relay**
16s	135mm	Open: LS1 Air Close: LS1Liq
	165mm	Open: LS1 Liq Close: LS1Air
	200mm	(same as above for LS2,LS3,LS4)
	250mm	Open:LS2 Air Close:LS1Liq
	300mm	Open:LS1 Liq Close:LS2Air
	350mm	Open:LS3 Air Close:LS2Liq
	400mm	Open:LS2 Liq Close:LS3Air
	500mm	Open:LS4 Air Close:LS3Liq
	600mm	Open:LS3 Liq Close:LS4Air

Level Sensor mode		
Range	**Sensor Control**	**Sensor 2&4 FREQUENCY**
... mm	Level Unaffected	Auto
	Limit the level	2,2MHz
WR threshold		2,1MHz
disabled	**Bottom THICKNESS**	2,0MHz
3dB	... mm	1,8MHz
4dB		1,6MHz
5dB	**Wall THICKNESS**	1,5MHz
6dB	... mm	1,4MHz
7dB		1,3MHz
8dB	**Sensor 1&3 FREQUENCY**	1,2MHz
9dB	Auto	
10dB	2,2MHz	**RELAY ON Level**
	2,1MHz	... mm
Liquid Sound VELOCITY	2,0MHz	
... m/s	1,8MHz	**RELAY OFF Level**
	1,7MHz	... mm
Inner DISTANCE	1,6MHz	
... mm	1,5MHz	**4-20mA out**
	1,4MHz	disabled
Sensor HEIGHT	1,3MHz	Level 0-100%
... mm	1,2MHz	Velocity 1000-2000m/s

Gel Distance Sensor mode		
100% Distance		**RELAY 1 ON Distance**
… mm		… mm
		RELAY 1 OFF Distance
0% Distance		… mm
… mm		(same as above for RELAY 2-4)
Liquid Sound VELOCITY		
… m/s		**4-20mA out A**
		disabled
		Distance 0-100%
		Signal 0-85dB
		4-20mA out B
		disabled
		Distance 0-100%
		Signal 0-85dB

Gel Sensor mode		
Type	**GEL-THRESHOLD**	**LiquidSensorWR THRESHOLD**
No Gel Sensors	not set	disabled
Level Switch GS1 GS2 GS3 GS4	0,6 %	3 dB
Level Switch GS1 GS2 GS3	0,8 %	4 dB
Level Switch GS1 GS2	1,0 %	5 dB
Level Switch GS1 GS2	1,2 %	6 dB
Level Switch QS	1,4 %	7 dB
	1,7 %	8 dB
ECHO-DISTANCE	2,0 %	9 dB
... mm	2,3 %	10 dB
	2,6 %	
GEL-TYPE	3,0 %	**Relay**
5dB/m at 2MHz 10dB/m at 4MHz	3,5 %	not set
7dB/m at 2MHz (Streamline SP)	4,0 %	Open: Gel
10dB/m 2MHz, 20dB/m 4MHz	5,0 %	Close: Gel
15dB/m 2MHz, 30dB/m 4MHz	6,0 %	Close: Air
20dB/m 2MHz, 40dB/m 4MHz	7,0 %	Close: Err
25dB/m 2MHz, 50dB/m 4MHz	8,0 %	Close: no sensor
30dB/m 2MHz, 60dB/m 4MHz	9,0 %	Close: 10% > Gelconc >16%
35dB/m 2MHz, 70dB/m 4MHz	10 %	
40dB/m at 2MHz (Tungsten)		**mA output**
45dB/m 2MHz, 90dB/m 4MHz	**FREQUENCY**	disabled
	1,3 MHz	Gel Level 1,5mA/GelDetection
	1,5 MHz	relative attenuat. 1mA = - 4dB/m
	1,7 MHz	Gelconcentration 1mA = 1%
	2,0 MHz	
	2,2 MHz	
	4,0 MHz	

PROFIBUS		
BITRATE	**ADDRESS**	**PARAMETER ACCESS**
9,6 kbit/s	1...125	Profibus only
19,2 kbit/s		Menu only
45,45 kbit/s	**CONTROL** (enabl/disabl Profibus**)**	
93,75 kbit/s	DISABLED	
187,5 kbit/s	ENABLED	
500 kbit/s		
1500 kbit/s		

14. Software Version History

D72RevE and DP72RevE and D128RevA and G72RevA

Version 5.51 January 2019 Air Sensor FCS4 and PAC4 improved internal settings.

Version 5.50 December 2018 Air Sensor CCS Ex is added to menu settings.

Version 5.41 November 2018 Level Switch MK is added to menu settings (same settings as MS)

Version 5.40 November 2018 Level Switch MS is added to menu settings

Version 5.31 Dec 2017 Air Sensor gets more diameter settings. A sometimes occurring Profibus error is fixed.

Version 5.23 Oct 2017 Air Sensor extending diameter settings. Level Switch parameters adjusted for Level Switch MS and MK. Fixed Profibus unwillingness to answer SD1-request.

Version 5.21 May 2017 Support for Air Sensor DAP. Diameter range for Air Sensor has been extended. Gel Distance Mode minor bugfixes.

Version 5.16 March 2017 Ground connection recommendation to terminal 16 or 19 to avoid electric noise.

Version 5.10 February 2017 Air Sensor parameter diameter becomes a diameter-interval.

Version 5.09 December 2016 All 4-20mA outputs gets increased accuracy. LevelSensor: parameter change name from 100%Level to Range. Offset parameter is added.

Version 5.08 September 2016 GelSensor: Bugfix. Relay settings changed. WR THRESHOLD changed values. New calibration for 4MHz versions. LevelSensor: improvements.

Version 5.06 August 2016 POWER switch in D128 and G128 to be pressed 4 seconds to enter standby. Level Sensor calibration is faster. 4-20mA improved accuracy. Profibus AUTO bitrate bugfix (in 5.02).

Version 5.02 June 2016 Profibus AUTO bitrate was too slow, now it has become faster finding correct bitrate.

Version 5.01 - March 2016 Level Sensor mode: The noise-filter is improved. An additional WR-technique measurement is added to improve measuring levels below 20mm and empty container. No Sensor detection is added. Parameters has been changed so there is a new GSD-file.

Version 4.92 - November 2015 Gel Distance mode is added, available in G72 only.

Version 4.91 - October 2015 Level Sensor mode: show level in % instead of mm on the start-screen. No asking for calibration after change of parameters for the velocity sensor (to make possible for small adjustments of diameter). Three error messages: err1 err2 err3 instead of one single err. The sensors are named Sensor 1, Sensor 2, Sensor 3, Sensor 4 instead of LV1, VS1, LV2, VS2. Bugfix on sensor 3 and 4. Changes in how measurements and calibration values are displayed in SHOW DATA for Level Sensor. Increased accuracy in measurements.

Version 4.82 - September 2015 Air Sensor: Increased threshold for detecting connected sensor (FSC10Ex with barrier sometimes was not recognized before)

Version 4.81 - July 2015 Profibus is available for Gel Sensor mode. New GDS-file for profibus: GDS 3.3 which also includes GelSensor mode. FCP4 and FCP6 internal parameters for predelay and measuretime is changed to improve measurements. LevelSwitch: FILTER parameters gives more accurate filter time constants.

Version 4.71 - April 2015 Air Sensor: when a sensor is disconnected the corresponding relay disengages regardless of the relay settings.

Version 4.70 - September 2014 LevelSwitch: In profibus Level Switch Data 1-4 only bit 5 reports error (previously error was reported also for the not chosen technique). Profibus: Profibus status symbol T indicate reception of valid profibus telegram regardless of address. The symbol T indicates that the connection and bitrate is ok.

Version 4.64 - August 2014 Profibus bugfix: Auto bitrate. Level Sensor mode for prototype G72 is adapted for measuring gel level. Level Switch threshold for weak echo error is reduced from 25 to 12dB. Level Switch digital filter settings is changed to improve filtering the noise from variable-frequency-drives.

Version 4.58 - April 2014 Air Sensor mode: adding 10dB so the signal becomes same as before. Reduce threshold for Err4 (weak Liq) from 35dB to 31dB and from 20dB to 19dB for Ex. Gel Sensor mode: increased range for gel concentration 0,6% to 10%. Gel Sensor in air now show 0% gel. Relay indication of weak signal now also indicate >10% gel.

Version 4.56 - Jan 2014 Profibus bugfix: writing to locked buffer could sometimes produce invalid Profibus telegram.

Version 4.54 - Jan 2014 A problem exist that Air Sensor show 10dB weaker signal due to changed calibration table.

Version 4.52 - Dec 2013 Adjusted internal parameters for LevelSwitch RS. Gel Sensor mode is changed and improved.

Version 4.50 - Dec 2013 The new calibration table gives 10dB less. (to allow stronger signal)

D72RevE has a new processor, higher clock speed and more memory.

D72RevD and DP72RevD

Version 4.33 - Oct 2013 G74 and Gel Sensor exist. Air Sensor mode: Show PAC/FCP instead of PACnn (customers keep buying old FCP instead of new PAC). Bugfix (bug exist in version 4.30 & 4.31) Flash memory is full, code is being optimized. Level Switch mode: Relay disengages when sensor is not connected.

Version 4.21 - June 2012 Air Sensor mode bugfix in measurement optimizing.